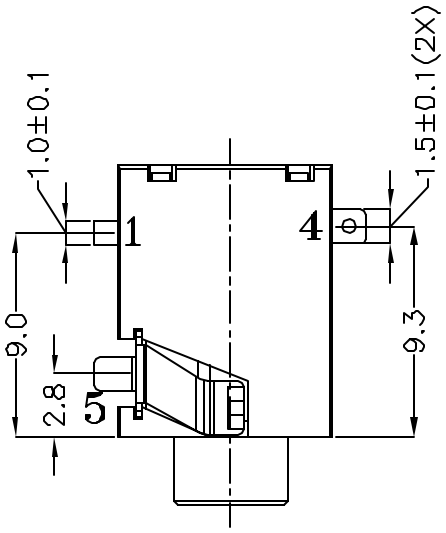

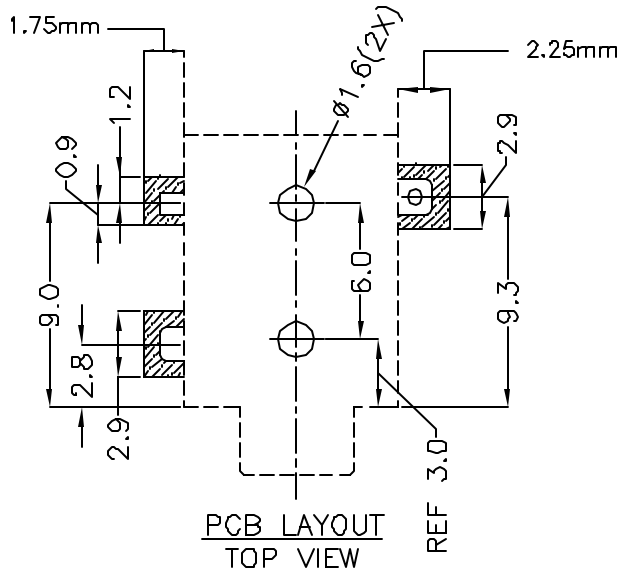

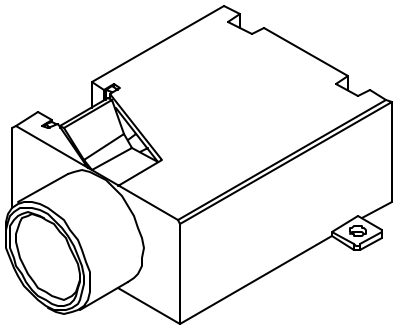

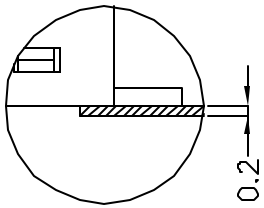

COPLANARITY

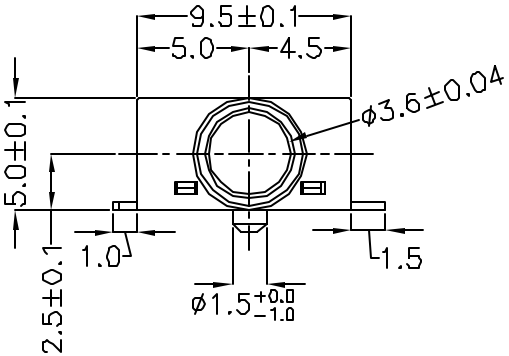

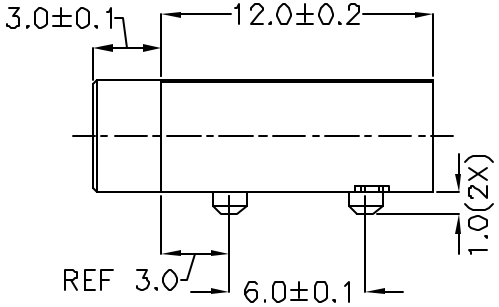

NO.	PART NAME	MATERIAL	PLATING	REMARKS
X	HOUSING	POLYAMIDE	X	UL94V0
X	BOTTOM COVER	POLYAMIDE	X	UL94V0
1	RING TERMINAL	Cu–Ti	GOLD FLASH	25 MICRONS
4	TIP TERMINAL	Cu–Ti	GOLD FLASH	25 MICRONS
5	SLEEVE (EARTH) TERMINAL	PBS	GOLD FLASH	30 MICRONS

SPECIFICATIONS:

1. RATED VOLTAGE–16 VDC
2. RATED CURRENT–300 mA
3. CONTACT RESISTANCE–100 mOHMS OR LESS UNDER ALL CONDITIONS, INCLUDING AFTER LIFE TESTING.
4. INSULATION RESISTANCE–100 MOHMS OR GREATER AT 500 VDC.
5. DIELECTRIC WITHSTAND VOLTAGE–500 VAC RMS FOR 1 MINUTE.

SCHEMATIC

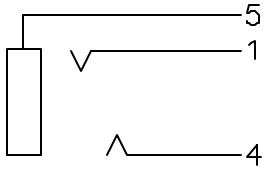

CUI INC
9815 SW Allen, Suite 103
Beaverton, OR 97005
Phone: (503) 643–4899
800–275–4899
Fax: (503) 372–1286
Website: www.cui.com

TITLE: 3.5mm SURFACE MOUNT AUDIO JACK-STEREO

PART NO. SJ–3513–SMT

UNITS: Millimeters

DRAWN BY: Todd R. White

APPROVED BY:

SCALE: 3X

PC FILE NAME: SJ–3513–SMT.DWG

COPYRIGHT 1999 BY CUI INC.