Tous droits strictement reserves. Reproduction ou communication a des tiers interdite sous quelque forme que ce soit sans autorisation ecrite du proprietaire. Propriete de c FCI. Droits de reproduction FCI.

All rights strictly reserved. Reproduction or issue to third parties in any form whatever is not permitted without written authority from the proprietor. Property of FCI. Copyright FCI.

PRODUCT NO.	ROWS	POWER			SIGNAL			POWER			
		E1	P1	P2	P3	1	2	3	P4	P5	P6	E2
51963-065__ NOTE 3	D C B A	HA	PC	PC	PC	G G G G G G G G G G G G			PC	PC	PC	HA

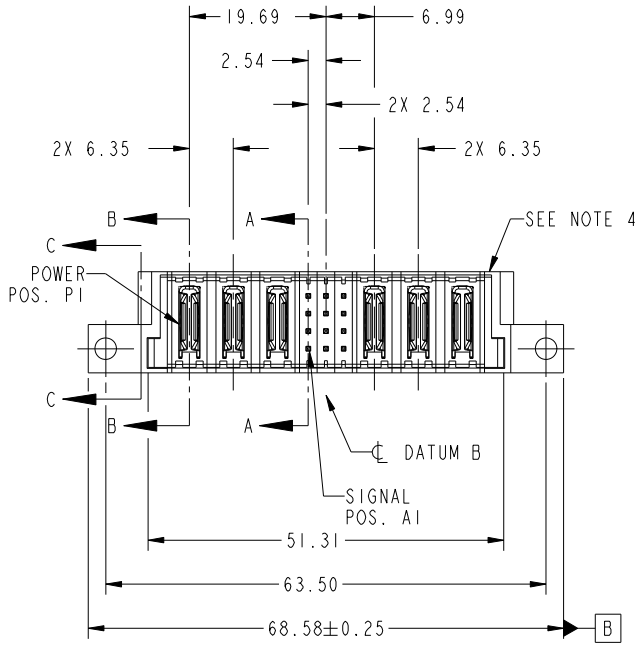

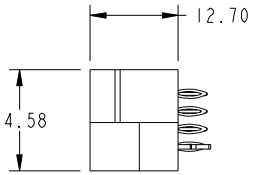

CODE	DIM "M" MATING LENGTH	CONTACT TYPE
PC	[N/A]	POWER
HA	[N/A]	HOLD-DOWN
G	[6.86]	SIGNAL

ltr	ecn no.	dr	date
A	DG11-0064	AL	11/03/08

sheet	revision		
index	sheet		
1	2	A	A
3	4		

mat'l code

tolerances unless otherwise specified

linear	0.X ±0.5	
	0.XX ±0.25	
	0.XXX ±0.1	
angles	0° ±2°	
dr	Anson Liu	11/03/08
engr	Anson Liu	11/03/08
chr	PM ZHENG	11/03/08
appd	JOSEPH HSIA	11/03/08

CUSTOMER

COPY

projection

MM

scale 1:1

www.fciconnect.com

title: 3P + 12S + 3P VERTICAL PRESS-FIT HEADER

product family: PwrBlade

code: 213

size: A

dwg no: 51963-065

sheet: 1 of 4

cage code: 22526

Pro/E

PDM: Rev:A STATUS:Released Printed: Mar 12, 2011

Tous droits strictement reserves. Reproduction ou communication a des tiers interdite sous quelque forme que ce soit sans autorisation ecrite du propietaire.
Propriete de c FCI. Droits de reproduction FCI.

All rights strictly reserved. Reproduction or issue to third parties in any form whatever is not permitted without written authority from the proprietor.
Property of FCI. Copyright FCI.

PRODUCT NUMBER
51963-065__
NOTE 3

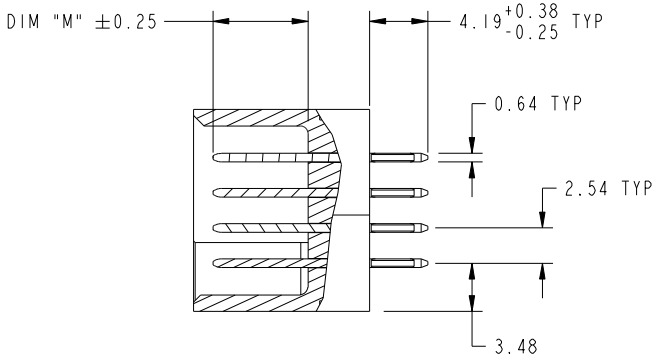

SECTION A-A
SCALE 2:1

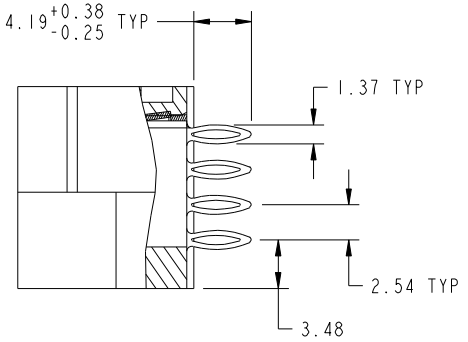

SECTION B-B
SCALE 2:1

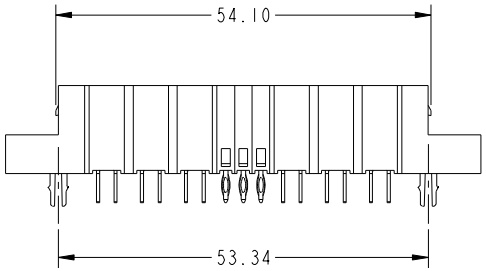

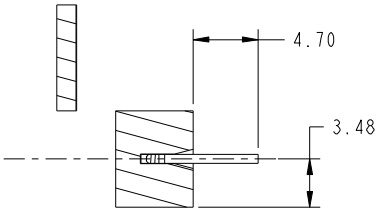

SECTION C-C
SCALE 2:1

mat'l code				tolerances unless otherwise specified			CUSTOMER	FCI www.fciconnect.com
ltr	ecn no.	dr	date	linear	0.X ±0.5		COPY	
A					0.XX ±0.25		projection	title: 3P + 12S + 3P VERTICAL PRESS-FIT HEADER
					0.XXX ±0.1			
				angles	0° ±2°			
				dr	Anson Liu	11/03/08	MM	product family: PwrBlade; code: 213
				engr	Anson Liu	11/03/08		size: A; dwg no: 51963-065; sheet: 2 of 4
				chr	PM ZHENG	11/03/08	scale	
				appd	JOSEPH HSIA	11/03/08	1:1	
sheet index	revision sheet							

Pro/E

cage code 22526

PDM: Rev:A STATUS:Released Printed: Mar 12, 2011

Tous droits strictement reserves. Reproduction ou communication a des tiers interdite sous quelque forme que ce soit sans autorisation ecrite du proprietaire.
Propriete de c FCI. Droits de reproduction FCI.

All rights strictly reserved. Reproduction or issue to third parties in any form whatever is not permitted without written authority from the proprietor.
Property of FCI. Copyright FCI.

PRODUCT NUMBER
51963-065__ NOTE 3

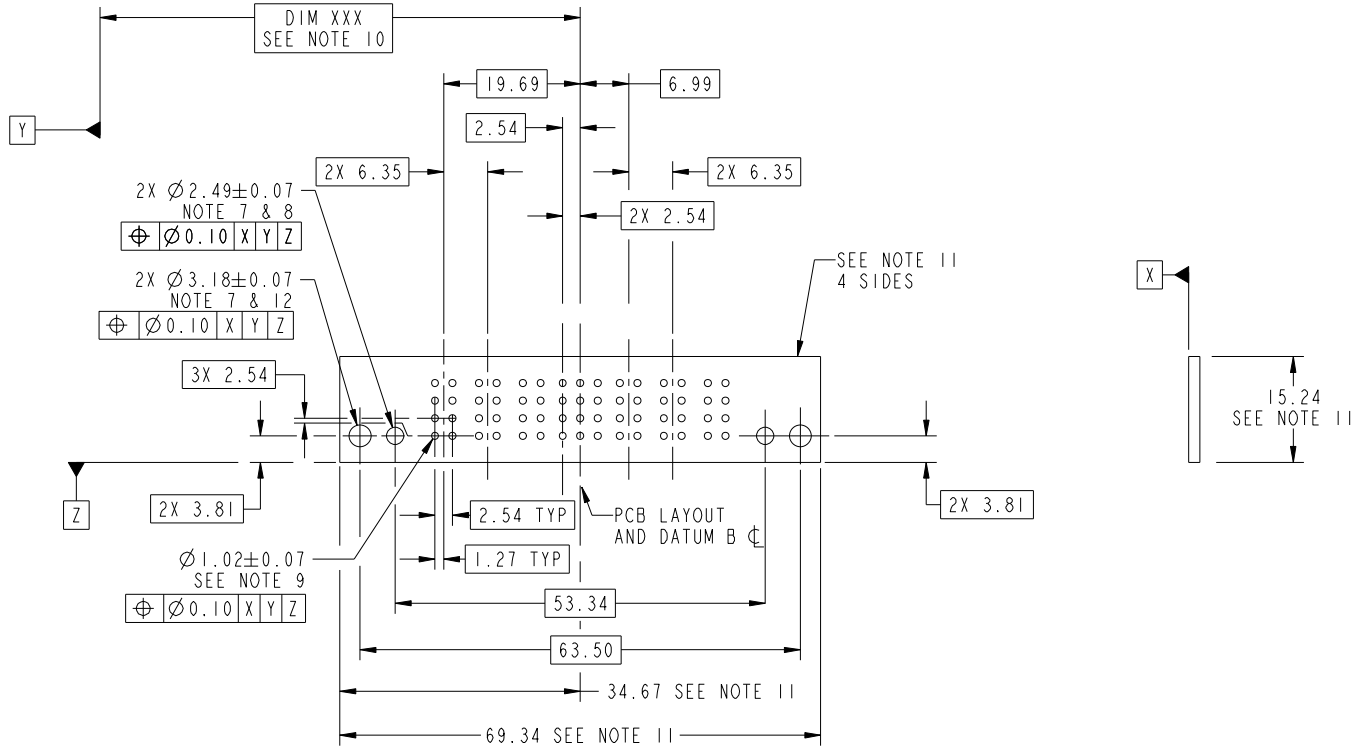

RECOMMENDED PCB LAYOUT

ltr	ecn no.	dr	date
A			

sheet	revision
index	sheet

mat'l code

tolerances unless otherwise specified

linear	0.X ±0.5	
	0.XX ±0.25	
	0.XXX ±0.1	
angles	0° ±2°	
dr	Anson Liu	11/03/08
engr	Anson Liu	11/03/08
chr	PM ZHENG	11/03/08
appd	JOSEPH HSIA	11/03/08

CUSTOMER

COPY

projection

MM

scale 1:1

www.fciconnect.com

title: 3P + 12S + 3P VERTICAL PRESS-FIT HEADER

product family: PwrBlade

code: 213

size: A

dwg no: 51963-065

sheet: 3 of 4

cage code: 22526

Pro/E

PDM: Rev:A STATUS:Released Printed: Mar 12, 2011

Tous droits strictement reserves. Reproduction ou communication a des tiers interdite sous quelque forme que ce soit sans autorisation ecrite du propietaire. Propriete de c FCI. Droits de reproduction FCI.

All rights strictly reserved. Reproduction or issue to third parties in any form whatever is not permitted without written authority from the proprietor. Property of FCI. Copyright FCI.

PRODUCT NUMBER
51963-065__ NOTE 3

NOTES:

1. DIMENSIONS AND TOLERANCES ARE IN ACCORDANCE WITH ASME Y14.5M, 1994 UNLESS OTHERWISE SPECIFIED.

CONNECTOR NOTES:

(2) HOUSING MATERIAL: UL 94 V-0 GLASS FILLED HIGH-TEMP THERMOPLASTIC
POWER CONTACT MATERIAL: COPPER ALLOY
SIGNAL PIN MATERIAL: COPPER ALLOY

3. SEE ITEM 3 & 4 IN PRINT 10064183 FOR PLATING SPEC OF 51963-065 AND 51963-065LF RESPECTIVELY.

(4) MANUFACTURER'S NAME, DATE CODE AND OPTIONAL P/N TO APPEAR ON THIS SURFACE. THE P/N CAN BE OMITTED IF THERE IS NOT ENOUGH SPACE ON THIS SURFACE.

5. PRODUCT SPECIFICATION GS-12-149.
APPLICATION SPECIFICATION BUS-20-067.

6. PACKAGED IN TRAYS.

PCB NOTES:

7. ALL HOLE DIAMETERS ARE FINISHED HOLE SIZE.

8. MOUNTING HOLES, WHERE APPLICABLE, ARE UNPLATED.

(9) Ø1.151±0.025 DRILLED HOLES PLATED WITH 0.008 MIN SnPb OR Sn OVER .001 [0.03] TO 0.08 Cu PLATING TO ACHIEVE Ø1.02±0.07 HOLE.

(10) "DIM XXX" TO BE DETERMINED BY THE CUSTOMER.

(11) CONNECTOR KEEP-OUT ZONE.

12. CUSTOMER SUPPLIES (2) #4-40 UNC SCREWS, HARDWARE TO MOUNT HEADER TO PC BOARD.

13. FOR PRESS FIT APPLICATION USE FCI CAM TOOL 430169-XXX.

mat'l code				tolerances unless otherwise specified			CUSTOMER COPY	FCI www.fciconnect.com
ltr	ecn no.	dr	date	linear	0.X ±0.5		projection	title 3P + 12S + 3P VERTICAL PRESS-FIT HEADER
A					0.XX ±0.25			
					0.XXX ±0.1			
				angles	0° ±2°			
				dr	Anson Liu	11/03/08	MM	product family PwrBlade
				engr	Anson Liu	11/03/08		code 213
				chr	PM ZHENG	11/03/08	scale 1:1	size A dwg no 51963-065
				appd	JOSEPH HSIA	11/03/08		sheet 4 of 4
sheet index	revision sheet							

Pro/E

cage code 22526