THIS DRAWING IS UNPUBLISHED. RELEASED FOR PUBLICATION -.- .
© COPYRIGHT - BY TYCO ELECTRONICS CORPORATION. ALL RIGHTS RESERVED.

LOC	DIST
—	—

REVISIONS

P	LTR	DESCRIPTION	DATE	DWN	APVD
	G	REV PER ECO 10-012616	6-17-10	CT	RL

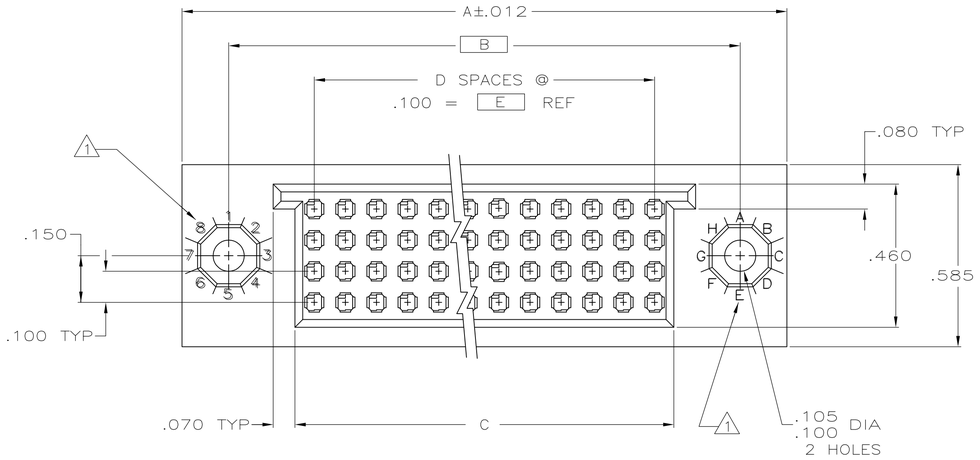

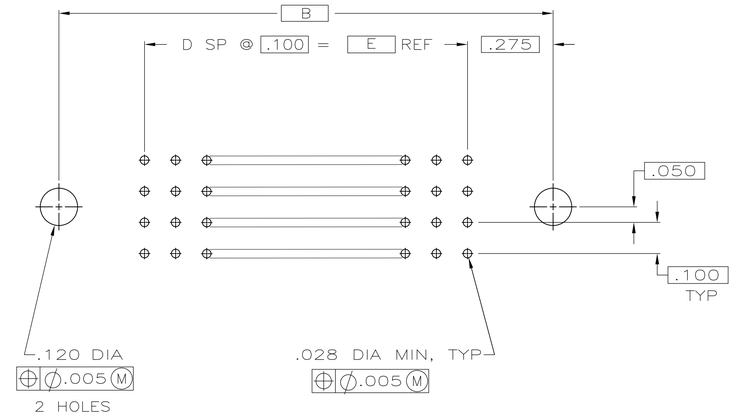

RECOMMENDED P.C. BOARD LAYOUT

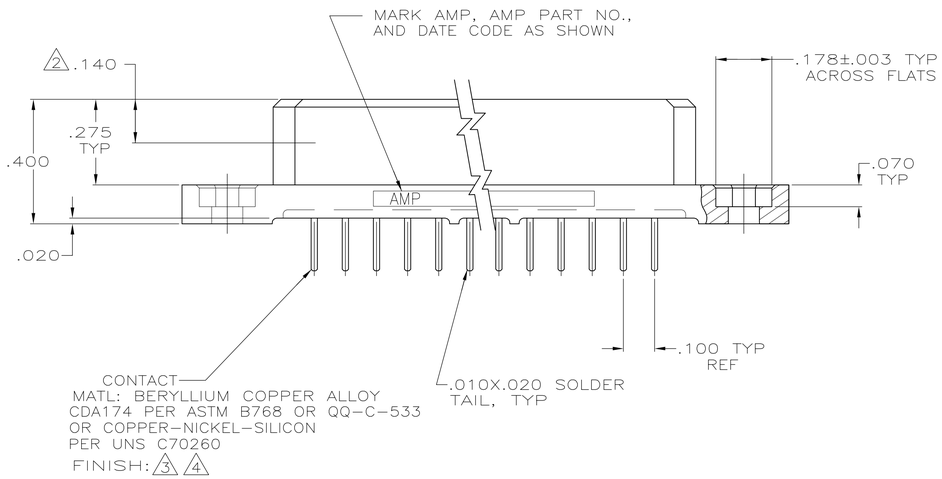

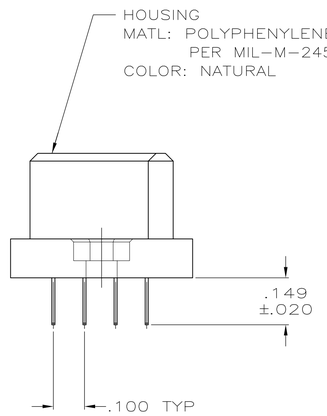

1. KEY POSITION IDENTIFICATIONS MOLDED ON SURFACES SHOWN.
2. MAX DEPTH OF CONTACT POINT.
3. FINISH: PLATED GOLD .000050 THK PER ASTM-B-488 IN CONTACT AREA WITH A POINT OF PLATING THICKNESS MEASUREMENT .135 FROM MATING END OF CONTACT; TAILS PLATED TIN-LEAD; ALL OVER NICKEL PER AMS QQ-N-290.
4. FINISH: PLATED GOLD .000050 THK PER ASTM-B-488 IN CONTACT AREA WITH A POINT OF PLATING THICKNESS MEASUREMENT .135 FROM MATING END OF CONTACT; TAILS PLATED TIN; ALL OVER NICKEL PER AMS QQ-N-290.

	E	D	C	B	A	POSN	PART NUMBER
4	3.100	31	3.224	3.650	3.950	128	6-446081-7
4	4.900	49	5.024	5.450	5.750	200	6-446081-0
3	1.900	19	2.024	2.450	2.750	80	2-446081-2
3 OBSOLETE	.900	9	1.024	1.450	1.750	40	2-446081-1
3 OBSOLETE	1.600	16	1.724	2.150	2.450	68	2-446081-0
3	2.400	24	2.524	2.950	3.250	100	1-446081-9
3	2.900	29	3.024	3.450	3.750	120	1-446081-8
3	3.100	31	3.224	3.650	3.950	128	1-446081-7
3 OBSOLETE	3.400	34	3.524	3.950	4.250	140	1-446081-6
3 OBSOLETE	3.700	37	3.824	4.250	4.550	152	1-446081-5
3 OBSOLETE	3.900	39	4.024	4.450	4.750	160	1-446081-4
3 OBSOLETE	4.100	41	4.224	4.650	4.950	168	1-446081-3
3 OBSOLETE	4.400	44	4.524	4.950	5.250	180	1-446081-2
3 OBSOLETE	4.700	47	4.824	5.250	5.550	192	1-446081-1
3	4.900	49	5.024	5.450	5.750	200	1-446081-0
3 OBSOLETE	5.300	53	5.424	5.850	6.150	216	446081-9
3	5.400	54	5.524	5.950	6.250	220	446081-8
3 OBSOLETE	5.700	57	5.824	6.250	6.550	232	446081-7
3 OBSOLETE	5.900	59	6.024	6.450	6.750	240	446081-6
3 OBSOLETE	6.400	64	6.524	6.950	7.250	260	446081-5
3 OBSOLETE	6.600	66	6.724	7.150	7.450	268	446081-4
3 OBSOLETE	6.900	69	7.024	7.450	7.750	280	446081-3
3 OBSOLETE	7.200	72	7.324	7.750	8.050	292	446081-2
3 OBSOLETE	7.400	74	7.524	7.950	8.250	300	446081-1

THIS DRAWING IS A CONTROLLED DOCUMENT.

DIMENSIONS: INCHES

TOLERANCES UNLESS OTHERWISE SPECIFIED:
0 PLC ± –
1 PLC ± –
2 PLC ± .01
3 PLC ± .005
4 PLC ± –
ANGLES ± –

MATERIAL: SEE CALLOUT
FINISH: SEE CALLOUT

DWN T. THOMPSON 04-03-95
CHK D. MILLER 04-03-95
APVD D. MILLER 04-03-95
PRODUCT SPEC —
APPLICATION SPEC —
WEIGHT —

Tyco Electronics
Tyco Electronics Corporation
Harrisburg, Pa 17105-3608

NAME: RECEPTACLE ASSEMBLY, FOUR ROW BOX, LOW FORCE CONTACTS,

SIZE	CAGE CODE	DRAWING NO	RESTRICTED TO
A1	00779	C-446081	—

CUSTOMER DRAWING | SCALE 4:1 | SHEET 1 OF 1 | REV G

AMP 4805 REV 31MAR2000