THIS COPY IS PROVIDED ON A RESTRICTED BASIS AND IS NOT TO BE USED IN ANY WAY DETRIMENTAL TO THE INTERESTS OF PANDUIT CORP.

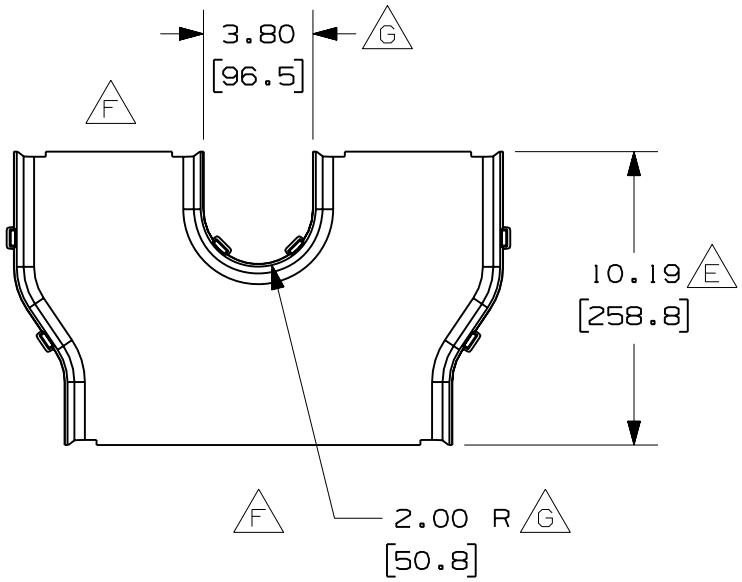

PANDUIT PART NUMBER	WEIGHT
FRY126	1.43 LB/EACH (647g/EACH)

D

C NOTES:

1. SEE CURRENT CATALOG FOR ADDITIONAL PART SUFFIXES TO INDICATE COLOR AND/OR PACKAGE QUANTITY.
2. THE FIBERRUNNER 12x4 "Y" TRANSITION WITH 6" EXITS IS DESIGNED WITH A MINIMUM 2" (50.8) BEND RADIUS TO PROTECT FIBER OPTIC CABLES.
3. DIMENSIONS IN PARENTHESES ARE IN METRIC.

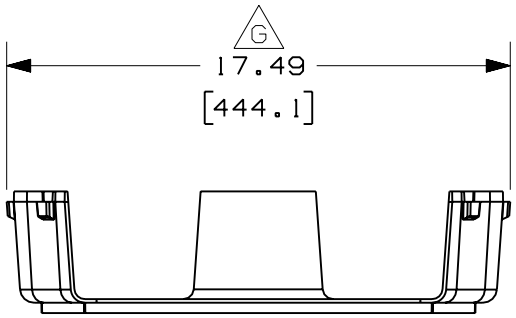

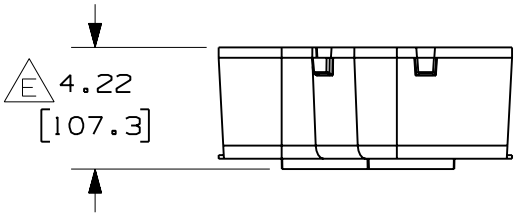

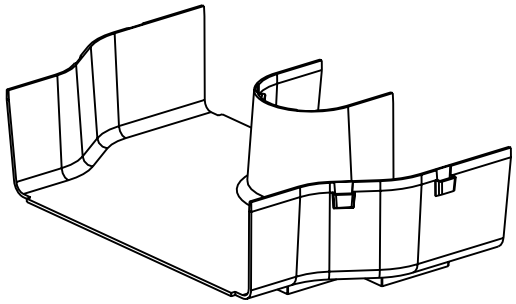

ENG. REF.: D37617DP_DC_FRY126_01.prt

CAD FILENAME/LAYERS B FRY126.pdf

PANDUIT CORP TINLEY PARK, ILLINOIS

FIBERRUNNER 12x4 "Y" TRANSITION WITH 6" EXITS (FRY126)
A CUSTOMER DRAWING

UNLESS OTHERWISE SPECIFIED, DIMENSIONAL TOLERANCES ARE:
(.X) ± (.XXX) ±
(.XX) ±.03 (.8) ANGLES ±

UNLESS OTHERWISE SPECIFIED, ALL DIMENSIONS ARE GIVEN IN INCHES, THIRD ANGLE PROJECTION.

DRAWN BY JHNU
MAT'L: ABS
SCALE NONE
DATE 2-13-01
CHK'D HIW
DRAWING NO. 37617-100
DWG A SIZE

REV	DATE	BY	CHK	DESCRIPTION	ECN - R	CUST	SUP	GMBH
-	--------	---	---	G. ADDED DIMENSIONS	-------- --	--		
-	--------	---	---	F. REMOVED DIMENSIONS E. RELOCATED DIMENSIONS	-------- --	--		
-	--------	---	---	D. REVISED PART WEIGHT C. REVISED GENERAL NOTES	-------- --	--		
1	7-20-06	DTP	RN	B. REVISED CAD FILENAME A. REVISED DRAWING TITLE	37617-100 RN	RN		
R	2-13-01	JHNU	CEO	RELEASED TO PRODUCTION	37617-100 HIW	HIW		