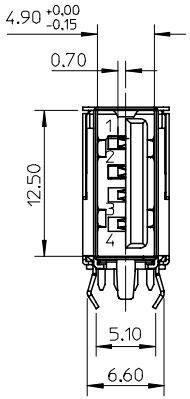

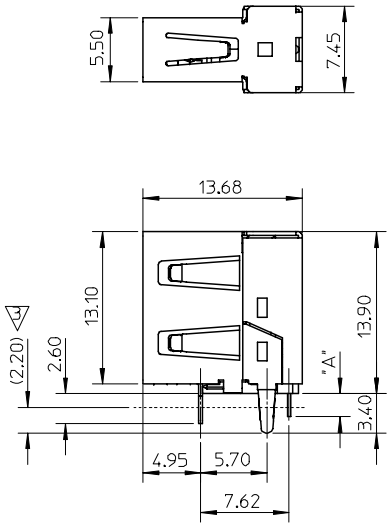

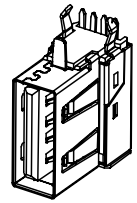

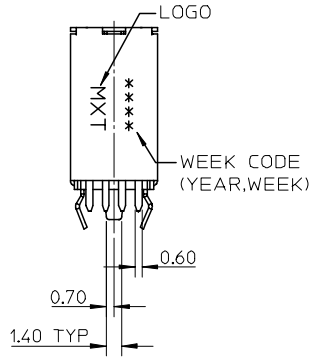

NOTES:
1.MATERIAL:
HOUSING:NYLON, GLASS FILLED, UL94V-0, COLOR:BLACK OR WHITE.
TERMINAL:PHOSPHOR BRONZE.
METAL SHELL:PHOSPHOR BRONZE.
2.PLATING:
TERMINAL:
CONTACT AREA:
(a) GOLD FLASH.
(b) GOLD (Au),THICKNESS=30 MICROINCH/0.76 MICROMETER.
SOLDER TAIL:TIN(Sn),THICKNESS=100 MICROINCH MIN/2.54 MICROMETER MIN.
UNDER PLATE:NICKEL(Ni).
METAL SHELL:TIN (Sn),THICKNESS=100 MICROINCH MIN/2.54 MICROMETER MIN.
UNDER PLATE:COPPER(Cu),THCIKNESS=50 MICROINCH MIN/1.27 MICROMETER MIN.
NICKEL(Ni).
SURFACE APPEARANCE:BRIGHT.
3.DIP PLATING FOR METAL SHELL TIN PLATED AREA.
4.RECOMMENDED PCB THICKNESS:1.60mm or 2.00mm.
5.PRODUCT SPECIFICATION:REFER TO PS-67579-001.
6.PACKAGING SPECIFICATION:REFER TO PK-67579-001.
7.TEST SUMMARY:REFER TO TS-67579-001.
8.LEAD FREE AND ROHS COMPLIANCE PRODUCT.

HSG COLOR	DIMENSION "A"	P/N	GOLD PLATING	RECOMMENDED PCB THICKNESS
BLACK	2.00±0.15	67579-0900	GOLD FLASH	1.60 mm
		67579-0901	30 MICROINCH	
	3.10±0.10	67579-0902	GOLD FLASH	2.00 mm
		67579-0903	30 MICROINCH	
WHITE	2.00±0.15	67579-1900	GOLD FLASH	1.60 mm
		67579-1901	30 MICROINCH	
	3.10±0.10	67579-1902	GOLD FLASH	2.00 mm
		67579-1903	30 MICROINCH	

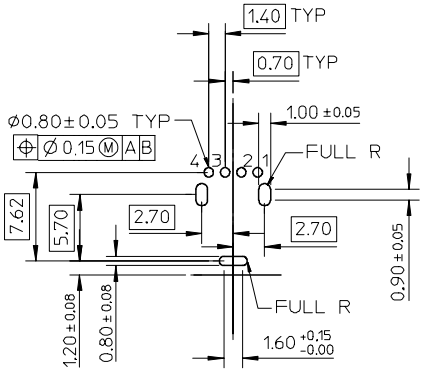

RECOMMENDED PCB LAYOUT
(TOP VIEW)

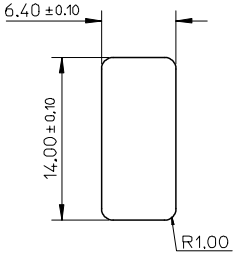

RECOMMENDED PANEL OPENING

REV	DESCRIPTION
A	NEW RELEASE EC NO: SH2006-0313 2006/01/25 DRWN:RTSAI 2006/01/25 CHKD: 2006/01/25 APPR:WMSCHANG 2006/01/25

QUALITY SYMBOLS
▼=0
▽C=0

GENERAL TOLERANCES (UNLESS SPECIFIED)

	mm	INCH
4 PLACES	± ---	± ---
3 PLACES	± ---	± ---
2 PLACES	± 0.25	± ---
1 PLACE	± 0.25	± ---
ANGULAR ± 3 °		

DRAFT WHERE APPLICABLE MUST REMAIN WITHIN DIMENSIONS

DIMENSION STYLE: MM ONLY
SCALE
DESIGN UNITS: METRIC
THIRD ANGLE PROJECTION

DRAWN BY	LINDA	DATE 2005/07/26
CHECKED BY	ROGER TSAI	DATE 2005/07/26
APPROVED BY	ALLEN LIN	DATE 2005/07/26

TITLE: USB UP-RIGHT CONNECTOR REVERSE TYPE (LEAD-FREE VERSION)

molex MOLEX INCORPORATED

MATERIAL NO.: SEE TABLE
DOCUMENT NO.: SD-67579-002
SHEET NO.: 1 OF 1
SIZE: A3

THIS DRAWING CONTAINS INFORMATION THAT IS PROPRIETARY TO MOLEX INCORPORATED AND SHOULD NOT BE USED WITHOUT WRITTEN PERMISSION