THIS DRAWING IS UNPUBLISHED. RELEASED FOR PUBLICATION 20
© COPYRIGHT 20 BY TYCO ELECTRONICS CORPORATION. ALL RIGHTS RESERVED.

PART NUMBER	REV	FIRST USED	POWER UNIT	FEED TYPE	DESCRIPTION
1855126-1	A	122500-1	LEADMAKER	POST FEED	CUTS CARRIER
1855126-2	A	565435-5	BENCH MODEL K	PRE FEED	CUTS CARRIER
1855126-3	A	354500-1	BENCH MODEL G	PRE FEED	CUTS CARRIER
7-1855126-7	A	-	-	-	SPARE PARTS

1. RECOMMENDED SPARE PARTS
2. GREASE LIGHTLY
3. GUARD MUST BE IN PLACE WHEN OPERATING APPLICATOR IN A BENCH MACHINE
4. INSTALL ITEMS 101, 102, AND 119 ON SIDE OF STRIPPER ON APPL HOUSING USING ITEM 21.

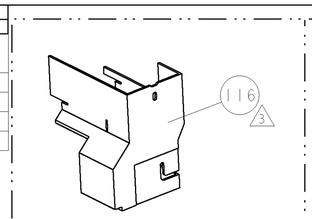

AMP-O-LECTRIC TERM GUARD

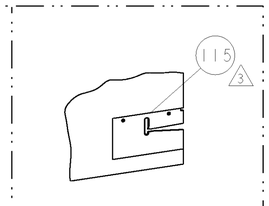

G TERMINATOR GUARD

TERMINAL NAME: TERMINAL, EYE-TYPE

-	1627170	AMP TERM - AMP CRIMP SPECS			
-	-				
-	-	REF SET	CRIMP HEIGHT		WIRE SIZE
-	-	B8	1.90±0.05mm[.075±.002]		1.5mm2
-	-	C1	1.80±0.05mm[.071±.002]		1.0mm2
-	-	D1	1.70±0.05mm[.067±.002]		0.75mm2
-	-	E3	1.55±0.05mm[.061±.002]		0.5mm2
-	-	CRIMP	SIZE	TYPE	RANGE
-	-				
-	-	WIRE	2.54mm [.100]	F	0.5-1.5mm2
-	-	INSUL	4.06mm [.160]	O	Ø2.2mm-3.2mm

WIRE STRIP LENGTH	TERM APPL SPEC	FEED	APPL INSTRUCTIONS	SET UP GAGE
4.37-5.00mm	NONE	9.30 mm	408-8040	458637-1

LOC	DIST
A	66

REVISIONS

P	LTR	DESCRIPTION	DATE	DWN	APVD
	A	RELEASED	20DEC2006	MEH	GB

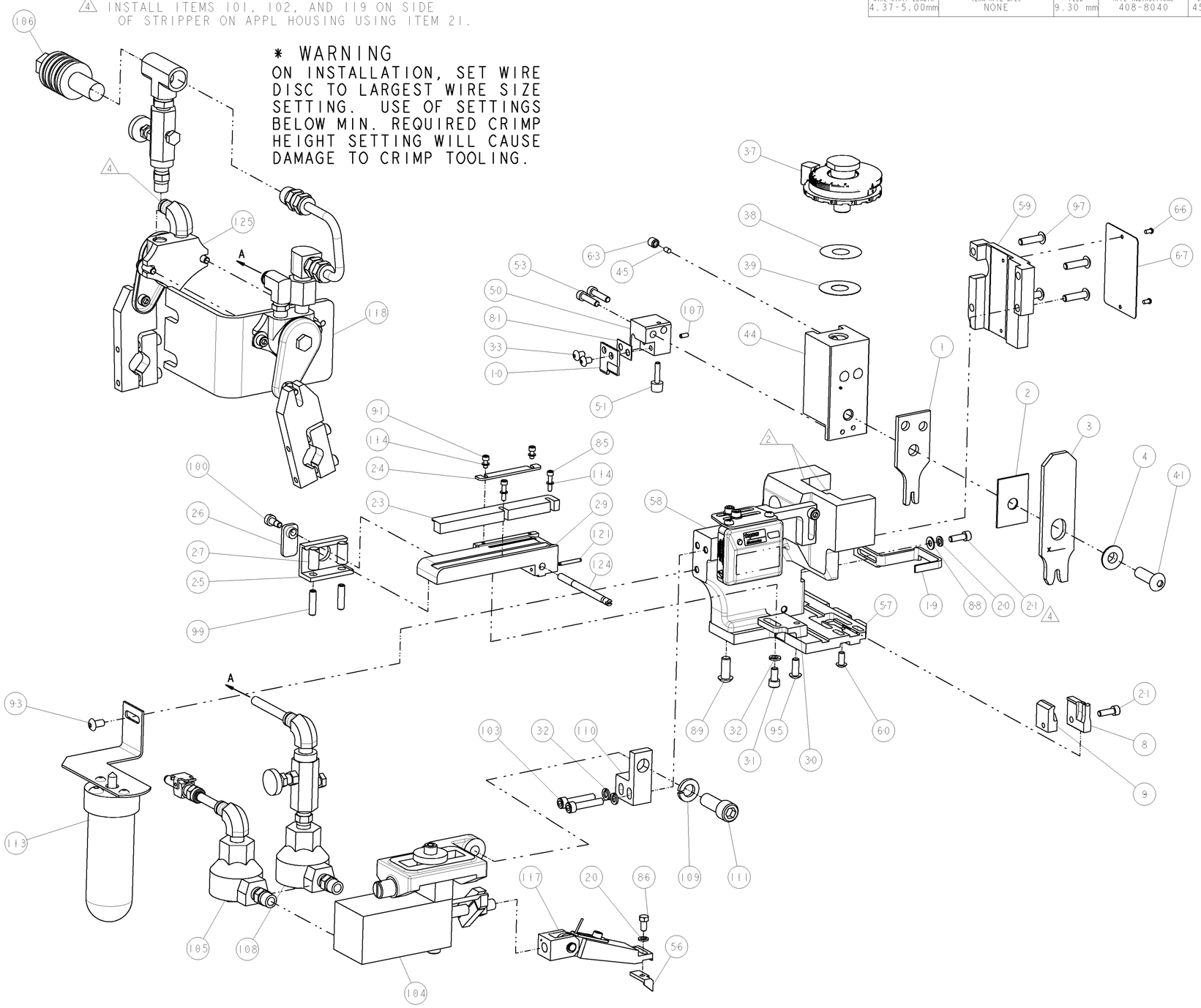

	-	-	1	-		-	455350-4	AIR BLAST ASS'Y	125
	-	1	1	1		-	690432-3	ADJUSTMENT SCREW	124
	-	1	1	1		-	4-21028-0	PIN, SLOTTED SPRING .094 X .750	121
4	-	18	24	18		IN	27319-4	TUBING, POLY-FLO, NATURAL	119
	-	-	1	-		-	692655-6	AIR FEED VALVE ASSEMBLY	118
	-	1	1	1		-	461062-1	ASSEMBLY, FEED FINGER	117
3	-	-	REF	-		..	455749-1	GUARD WINDOW	116
3	-	REF	-	-		..	679532-1	INSERT, GUARD	115
	-	4	4	4		-	21024-2	WASHER, SPRG LOCK, REG NO 4	114
	-	-	1	-		..	1-465184-0	LUBRICATOR ASSY	113
	-	1	1	1		-	3-21001-5	SCR, SKT HD CAP 3/8-16 X 1.000	111
	-	1	1	1		-	459610-1	MOUNT, FEED BRACKET	110
	-	1	1	1		-	21024-8	WASHER, SPRG LOCK, REG 3/8	109
	-	-	1	-		-	692655-5	AIR FEED VALVE ASSEMBLY	108
	-	1	1	1		-	2-21006-1	SCR, SET, CUP POINT 4-40 X .250	107
	-	-	1	-		-	24042-2	VALVE, SLEEVE, 3-WAY	106
	-	1	-	1		-	692655-7	AIR FEED VALVE ASSEMBLY	105
	-	1	1	1		-	461065-1	ASSEMBLY, AIR FEED	104
	-	2	2	2		-	3-21000-9	SCR, SKT HD CAP 10-32 X 1.000	103
4	-	1	1	1		-	986220-1	CLAMP, CABLE, BLACK	102
4	-	1	-	1		-	23238-1	INSERT, COUPLING	101
	-	1	1	1		-	22353-8	SCR, SHLD, SLOT HD, 3/16 DIA	100
	-	2	2	2		-	5-21006-6	SCR, SET, CUP POINT 10-32 X .750	99
	-	4	4	4		-	2-21002-9	SCR, BTN SKT HD CAP 10-32 X .750	97
	-	1	1	1		-	2-21002-7	SCR, BTN SKT HD CAP 10-32 X .500	95
	-	-	1	-		-	2-21002-6	SCR, BTN SKT HD CAP 10-32 X .375	93
	-	2	2	2		-	1-21000-3	SCR, SKT HD CAP 4-40 X .250	91
	-	3	3	3		-	2-22733-8	SCR, BHSC, SELF-LOCKING, 1/4-20 X .625	89
	-	1	1	1		-	21055-6	WASHER, FLAT, REG NO 8	88
	-	1	1	1		-	2-22603-0	SCR, HEX HD CAP 8-32 X .312	86
	-	2	2	2		-	1-21000-5	SCR, SKT HD CAP 4-40 X .500	85
	-	1	1	1		-	2-240641-1	SPACER	81
	-	1	1	1		-	4088040	SF APPL INST 408-8040	72
	-	1	1	1		-	217238-1	GENERAL INSTRUCTION PKG	71
	-	1	1	1		-	461264-1	PLATE, IDENTIFICATION	67
	-	2	2	2		-	21017-2	SCREW, DRIVE	66
	-	1	1	1		-	21009-2	SCR, SET, SELF LOCKING 1/4-20 X .250	63
	-	1	1	1		-	22733-8	SCR, BHSC, SELF-LOCKING, 8-32 X .375	60
	-	1	1	1		-	454220-1	CAP, RAM	59
	-	1	1	1		-	454485-1	HOUSING, SIDE FEED	58
	-	1	1	1		-	1633145-1	PLATE, BASE	57
	-	1	1	1		-	3-694433-9	FEED PAWL	56
	-	2	2	2		-	2-21000-9	SCR, SKT HD CAP 8-32 X .750	53
	-	1	1	1		-	811242-2	BUMPER, HOLD DOWN	51
	-	1	1	1		-	1583893-3	HOLDER, SLUG BLADE	50
	-	1	1	1		-	690191-1	PLUG,NYLON	45
	-	1	1	1		-	455673-1	RAM, SIDE FEED	44
	-	1	1	1		-	7-21002-9	SCR, BTN SKT HD CAP 5/16-24 X 1.00	41
	-	1	1	1		-	690125-1	SHIM SUB-ASSY	39
	-	1	1	1		-	469367-4	SHIM	38
	-	1	1	1		-	879103-2	FINE ADJUST HEAD SUBASSY	37
	-	2	2	2		-	2-21002-0	SCR, BTN SKT HD CAP 8-32 X .250	33
	-	3	3	3		-	21024-5	WASHER, SPRG LOCK, REG NO 10	32
	-	1	1	1		-	3-21000-4	SCR, SKT HD CAP 10-32 X .375	31
	-	1	1	1		-	455689-1	BLOCK, STRIP GUIDE ADJUST	30
	-	1	1	1		-	2-844048-8	PLATE, REAR STRIP GUIDE	29
	-	2	2	2		-	22281-9	SPRING, COMPRESSION	27
	-	1	1	1		-	240793-1	LEVER, DRAG RELEASE	26
	-	1	1	1		-	240792-1	DRAG, TERMINAL	25
	-	1	1	1		-	693855-1	FRONT STRIP GUIDE	24
	-	1	1	1		-	2-189124-5	GUIDE, FRONT STRIP	23
	-	2	2	2		-	2-21000-7	SCR, SKT HD CAP 8-32 X .500	21
	-	2	2	2		-	21024-4	WASHER, SPRG LOCK, REG NO 8	20
	-	1	1	1		-	1-456468-3	STRIPPER, SPECIAL	19
1	-	1	1	1		-	1633512-2	BLADE, SLUG	10
1	-	1	1	1		-	1752737-4	PLATE, REAR SHEAR	9
1	1	1	1	1		-	1633507-5	ANVIL, SPECIAL, COMBINATION	8
	-	1	1	1		-	1-238009-1	BLOCK, FL CRIMPER SPACER	4
1	1	1	1	1		-	5-683454-2	CRIMPER, INSULATION O	3
	-	1	1	1		-	1-455888-0	SPACER, CRIMPER	2
1	1	1	1	1		-	2-456407-2	CRIMPER, WIRE PREMIUM	1
	-77	-3	-2	-1		U/M	PART NO	DESCRIPTION	ITEM NO

THIS DRAWING IS A CONTROLLED DOCUMENT FOR TYCO ELECTRONICS CORPORATION. IT IS SUBJECT TO CHANGE WITHOUT NOTICE. ANY PERSON OR ORGANIZATION SHOULD BE CONTACTED FOR THE LATEST REVISION.

DIMENSIONS: INCHES

TOLERANCES UNLESS OTHERWISE SPECIFIED:
0 PLC ±-
1 PLC ±0.1
2 PLC ±0.01
3 PLC ±0.001
4 PLC ±0.0001
ANGLES ±-

MATERIAL - -
FINISH - -

DWN R.O.WILSON 20OCT2006
CHK R.O.WILSON 20OCT2006
APVD T. ELBIN 31OCT2006

PRODUCT SPEC -
APPLICATION SPEC -
WEIGHT -

tyco Electronics — Tyco Electronics, Harrisburg, PA 17105-3608

NAME SIDE FEED HDM APPLICATOR FINE ADJUST -

SIZE	CAGE CODE	DRAWING NO	RESTRICTED TO
A1	00779	C-1855126	-

CUSTOMER DRAWING — SCALE 3:5 — SHEET 1 OF 1 — REV A

CUSTOMER VIEWABLE ASSEMBLY