LOADING PATTERN MATING SIDE

	01				05				10						15						20					25
y	0	0	0	0	0	0	0	0	0	0	0				0	0	0	0	0	0	0	0	0	0	0	0
h	4	4	4	4	6	4	4	4	6	4	4				4	4	4	4	4	4	4	4	4	4	4	4
g	4	4	6	4	4	4	6	4	4	4	6				4	4	4	4	4	4	4	4	4	4	4	4
f	4	4	4	4	6	4	4	4	6	4	4				4	4	4	4	4	4	4	4	4	4	4	4
e	4	4	6	4	4	4	6	4	4	4	6				4	4	4	4	4	4	4	4	4	4	4	4
d	5	4	4	4	6	4	4	4	6	4	4				4	4	4	4	4	4	4	4	4	4	4	4
c	5	5	6	4	4	4	6	4	4	4	6				4	4	4	4	4	4	4	4	4	4	4	4
b	6	6	4	4	6	4	4	4	6	4	4				4	4	4	4	4	4	4	4	4	4	4	4
a	4	4	6	4	4	4	6	4	4	4	6				4	4	4	4	4	4	4	4	4	4	4	4
z	0	0	0	0	0	0	0	0	0	0	0				0	0	0	0	0	0	0	0	0	0	0	0

POS

LOADED CONNECTOR ASSEMBLY
(FOR EXAMPLE)

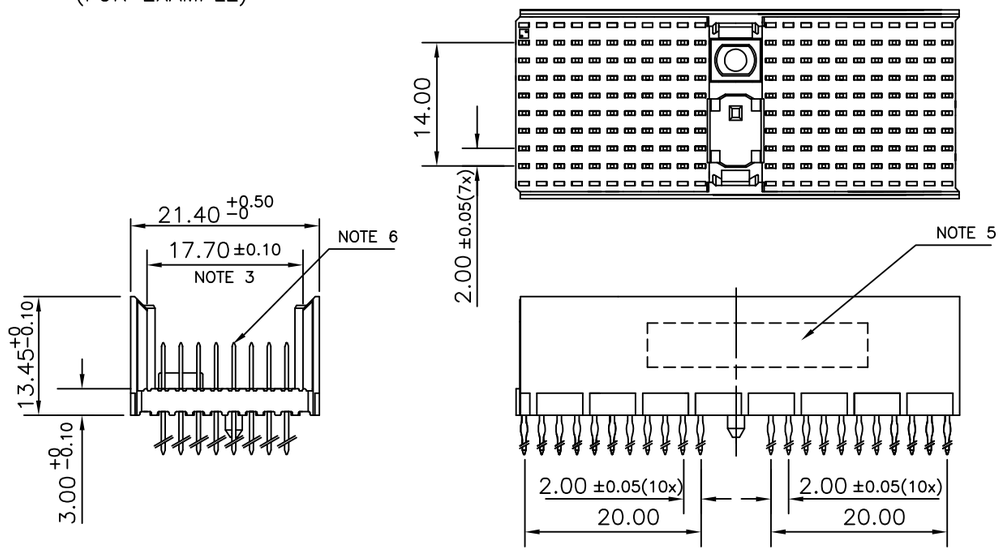

CONTACT OVERVIEW

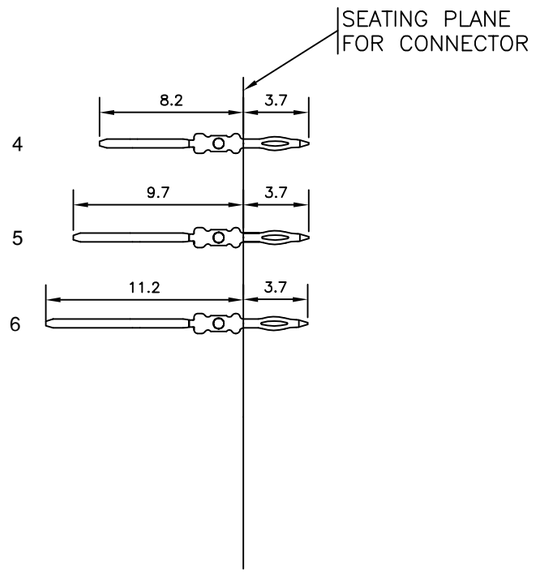

LAY-OUT P.C.B.-HOLE

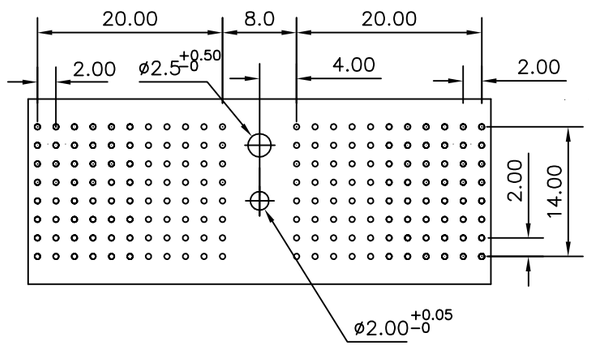

HM2P87PDH1K0----

LEAD FREE INDICATOR : LF = LEAD FREE
(DIGIT 15 & 16)

PLATING CODE (DIGIT 13 AND 14)
(REF DRW NO. BS,C , 201844 , 003)

NOTES

1. THIS PRODUCT IS CSA APPROVED.
2. THIS PRODUCT IS UL RECOGNIZED.
3. MEASURED AT THE BOTTOM.
4. MATERIAL CONTACT: PHOSPHORBRONZE
   HOUSING: CREAM WHITE GLASS FILLED POLYESTER UL-94V0
5. CONNECTOR PRINTED WITH P/N AND DATE CODE.
6. FOR ACTUAL CONTACT LOADINGS, SEE LOADING PATTERN MATNG SIDE.
7. SHAPE OF CONNECTOR HOUSING CAN ALTER DEPENDING ON PRODUCTION LOCATION
8. THE PRODUCT (LF) MEETS EUROPEAN UNION DIRECTIVES AND OTHER COUNTRY REGULATIONS AS DESCRIBED IN GS-22-008
9. FOR RECOMMENDED PTH DIMENSIONS REFER DRAWING : BS, A , 201572 , 001

PART NO: HM2P87PDH1K0----

ltr	ecn no	dr	date
A	I04-0087	MINI	2004/09/25
B	I05-0190	MINI	2005/10/13
C	I06-0090	MINI	2006/06/29

mat'l. code	SEE NOTE 4		
surface	ISO 1302		
tolerance	ISO 406 ISO 1101		
tolerances unless otherwise specified			
angles	0°±1°	linear	.0±0.2
			.00±0.1
projection	MM		
scale	–		
dr	MINI K VANDANATH	2004/09/25	
engr	BIJU K PAUL	2004/09/25	
chr	BIJU K PAUL	2006/06/29	
appd	BIJU K PAUL	2006/06/29	
product family	MILLIPACS		
title	MPACS 8+2R STR HDR PF CONN TYPE D		
dwg no	BS, C ,203028,165	sheet 1 of 1	size A3
type	Product Customer Drawing		
sheet index	revision C	sheet 1	

form: A3

FCIconnect.com
Copyright FCI