受控 CONTROLLED DOCUMENT					
编号 P/N	CPN688-CUST	版本 Rev	01	日期 Rel'd Date	SEP 14,09

DRAWING NO.
CPN688-CUST

REVISIONS

01	OFFICAL RELEASE					
	08-17-09	J J	T W	T		Betty 2009.09.08 08:53:22 +08'00'

Description:	N crimp plug RG8
Part No:	CPN688
Application:	For RG8 Cable
Crimp Tool:	24-313
Impedance:	50 Ohms
Frequency Range:	0-11 GHz
Material:	Crimp Sleeve Brass Nickel plated
	Contact Brass Ni/Au plated
	Body Brass Nickel plated
	Coupling Nut Brass Nickel plated
RoHS Compliance:	Yes
Technical Detail:	Refer to Emerson Document P/N 26-0000

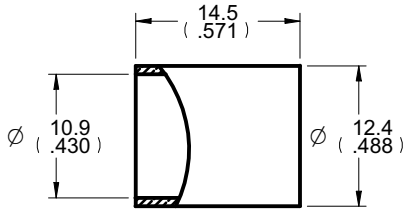

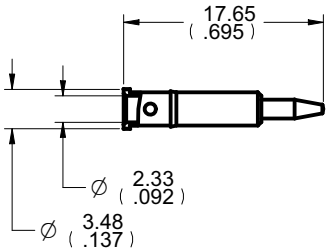

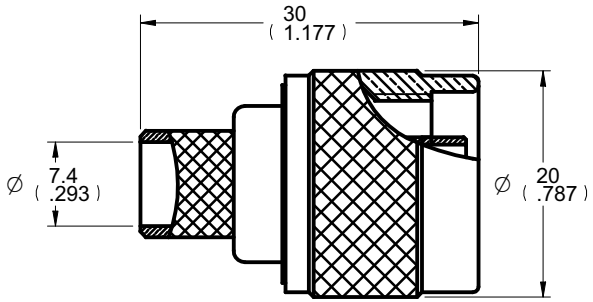

DIM OUTLINE

CUSTOMER COPY

TOLERANCE UNLESS OTHERWISE SPECIFIED		DRAWN BY JEAN.JIN	DATE 08-17-09
DECIMALS	mm	CHECKED BY TERRY.W	DATE 08-17-09
X	± 0.5		
X.X	± 0.3	APPROVED BY THOMAS	DATE 08-17-09
X.XX	± 0.1		
ANGLES	± 0.5°	U/M mm	

THIS DRAWING WAS PRODUCED BY COMPUTER, DO NOT SCALE DRAWING OR UPDATE MANUALLY.

cinch CONNECTIVITY SOLUTIONS a bel group

TITLE
N CRIMP PLUG RG8

SHEET	DRAWING NO.	SIZE
1 OF 1	CPN688-CUST	A