PART NO. 40DK40

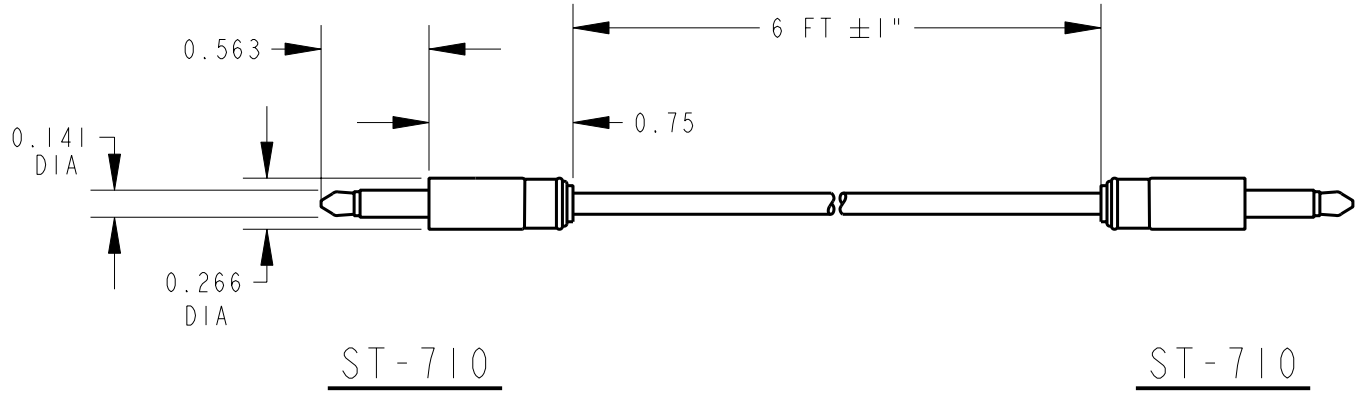

PLUGS MATERIALS:

CONDUCTORS: BRASS, NICKEL PLATED
INSULATORS: PHENOLIC
OVERMOLDING: CAB, GRAY

CABLE DESCRIPTION:

25 AWG CO-AXIAL CABLE
90% COVERAGE TINNED COPPER SPIRAL SHIELD
0.110 O.D.
GRAY

CUSTOMER DRAWING

CAD/CAM DWG. NO.
40DK40_CD

SHEET 1 OF 1

ISSUE	CHANGE NO.	DATE	BY	APP'D
A	FIRST DRAWN	10-27-92	RS	GHJ

REVISIONS

☆ STAR SYMBOL DENOTES CRITICAL DIMENSION, SEE S/C ENGINEERING STANDARD ES-0001

UNLESS OTHERWISE SPECIFIED

1. ALL DIMENSIONS IN INCHES
   TWO PLACE DECIMAL ±.01
   THREE PLACE DECIMAL ±.005
   FRACTIONAL DIMENSIONS ±1/64
   ANGLES ±1/2°
   ALL DIA'S CONCENTRIC WITHIN .005 T.I.R.
2. REMOVE ALL BURRS
3. MAKE NO DIMENSIONAL ALLOWANCES FOR APPLIED FINISHES, I.E., PLATING, PAINTING, ETC.
4. HOLES ON THE SAME CENTERLINE MUST BE ALIGNED WITHIN ±.002

DO NOT SCALE DRAWING

THIS DRAWING DESCRIBES A DESIGN CONSIDERED PROPRIETARY IN NATURE, DEVELOPED AND MANUFACTURED BY SWITCHCRAFT INC. AND IS RELEASED ON A CONFIDENTIAL BASIS FOR IDENTIFICATION PURPOSE ONLY.

SIZE	WIDTH	MULT	LBS./M	TEMPER

FINISH
SPEC. NO.

MATERIAL
SPEC. NO.

FIRST USED ON

SCALE 1 = 1

DATE DRAWN	BY	CHK'D	APP'D
10-27-92	RS	EB 11-11-92	GHJ 11-11-92

Switchcraft®

NAME
CABLE ASSEMBLY
ST-710 TO ST-710

PART NO. 40DK40

ISSUE A

Pro/Engineer CAD File

AH

ROUTING