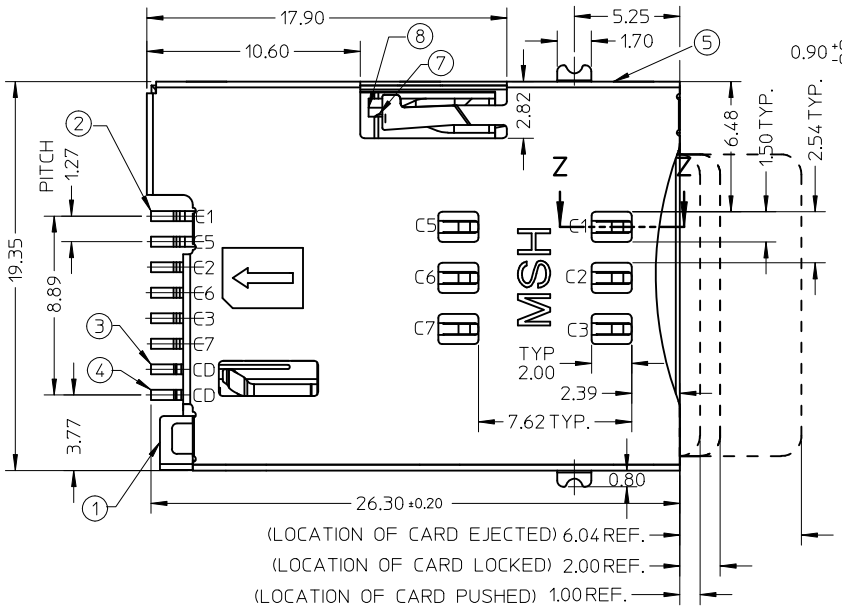

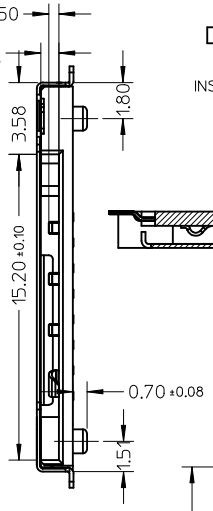

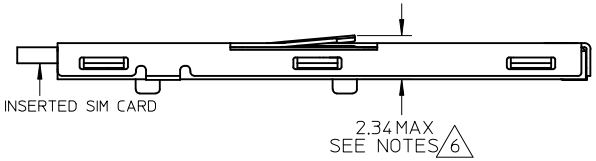

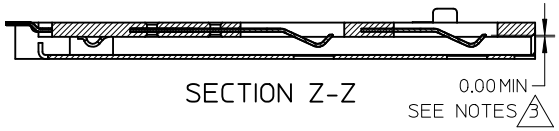

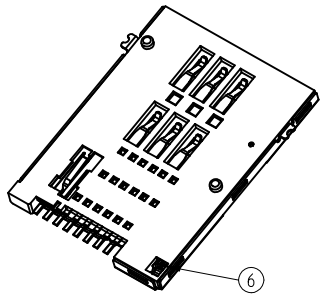

NOTES:

1 FINISH:
- 1-1 TERMINAL :
  - 50~200μ" NICKEL UNDER PLATED
  - 30μ" MIN GOLD PLATING ON CONTACT AREA
  - 3μ" MIN GOLD FLASH ON SOLDERING AREA
- 1-2 SHELL :
  - 50~200μ"NICKEL UNDER PLATED
  - 3μ" MIN GOLD FLASH ON SOLDERING AREA
- 1-3 DETECT PIN :
  - 50~200μ" NICKEL UNDER PLATED
  - 3μ" MIN GOLD PLATING ON CONTACT AREA
  - 3μ" MIN GOLD FLASH ON SOLDERING AREA
- 1-4 HOUSING:G/F 45%.UL94V-0,BLACK
- 1-5 HEART CAM :G/F 30%.UL94V-0,BLACK

2 SOLDER TAIL COPLANARITY:0.08MM MAX.

3 TERMINAL TIP MUST SINK INTO HOUSING

4 PRODUCT COMPLIANT TO ROHS DIRECTIVE 2002/95/EC AND ELV DIRECTIVE 2000/53/EC

5 DETECT SWITCH: INSERT CARD=ON (NORMAL=OPEN)

6 SPRING RISE UP DURING PUSH-PUSH PERIOD

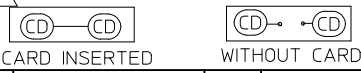

CARD INSERTED WITHOUT CARD

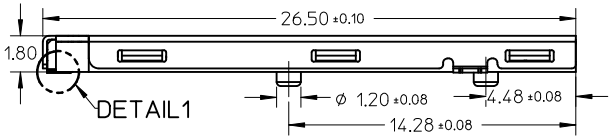

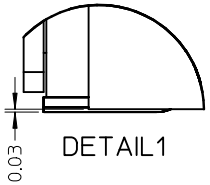

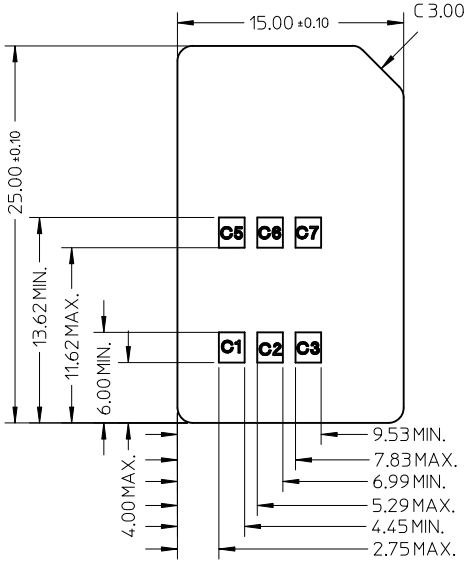

APPLICABLE CARD SIZE
THICKNESS:0.76+/-0.08

NO.	DESCRIPTION	Q'TY	MATERIAL
1	HOUSING	1	HIGH TEMPERATURE THERMOPLASTIC
2	TERMINAL	6	COPPER ALLOY
3	DETECT PIN LOWER	1	COPPER ALLOY
4	DETECT PIN UPPER	1	COPPER ALLOY
5	SHELLL	1	STAINLESS STEEL
6	COIL SPRING	1	PIANO WIRE
7	HEART CAM	1	NYLON
8	CAM PIN	1	STAINLESS STEEL

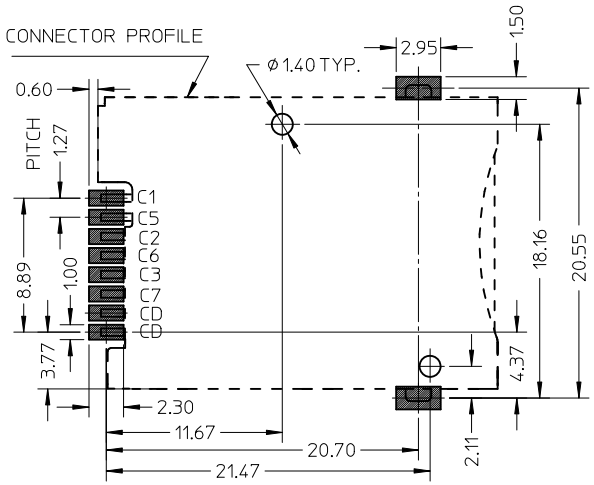

RECOMMENDED PCB LAYOUT
TOLERANCE +/-0.05MM

REV	DESCRIPTION
F1	NEW DIM TOL CTRL EC NO: S2011-0880 DRWN:KHLIM 2011/04/13 CH'KD:JTANG2 2011/04/25 APPR:SKTOH 2011/05/27

QUALITY SYMBOLS: F_A=0, F_C=0, F_P=0

GENERAL TOLERANCES (UNLESS SPECIFIED)

	mm	INCH
4 PLACES	± ---	± ---
3 PLACES	± ---	± ---
2 PLACES	± 0.15	± ---
1 PLACE	± ---	± ---
ANGULAR ±---°		

DRAFT WHERE APPLICABLE MUST REMAIN WITHIN DIMENSIONS

DIMENSION STYLE: MM ONLY
SCALE: NTS
DESIGN UNITS: METRIC
THIRD ANGLE PROJECTION

DRAWN BY	LHSHEN	DATE 2007/07/09
CHECKED BY	XUXIANG	DATE 2007/08/30
APPROVED BY	HWWANG	DATE 2007/08/30

TITLE: PUSH PUSH 6 PINS SIM WITH DETECT PIN&POST SALES DRAWING

molex MOLEX INCORPORATED

MATERIAL NO. 475531001

DOCUMENT NO. SD-47553-101

SHEET NO. 1 OF 1

SIZE A3

THIS DRAWING CONTAINS INFORMATION THAT IS PROPRIETARY TO MOLEX INCORPORATED AND SHOULD NOT BE USED WITHOUT WRITTEN PERMISSION