BS,C ,201843,898	D

GEN. ST.	01	02	03	04	05	06	07	08	0D	50	60	70	80	90
INT. ST.	10 11	12 13	14 18	20 31	32 33	34 38	39 40	42 43	44 45	46 48	56 70	72 73	75 76	81 82 83 84 88

REV.	DATE	DESCRIPTION	BY	C'K'D'
A	2001-09-14	CONVERSION REVISION 03	KN	
B	2002-05-28	EC B20086	MF	
C	2005-10-17	105-0196	ALEX B	BKP
D	2006-08-02	106-0118	ALEX B	BKP

LOADING PATTERN MATING SIDE

f	6	6	6	6	6	6	6	6	6	6	6				6	6	6	6	6	6	6	6	6	6
e	A	A	A	A	G	A	A	A	A	A	A				A	A	A	A	G	G	A	G	7	7	G
d	A	A	A	A	G	A	A	A	A	A	A				A	A	A	A	G	G	A	G	7	7	G
c	A	A	A	A	G	A	A	A	A	A	A				A	A	A	A	G	G	A	G	G	G	G
b	A	A	A	A	G	A	A	A	A	A	A				A	A	A	A	G	G	7	G	7	7	G
a	A	A	A	A	G	A	A	A	A	A	A				A	A	A	A	G	G	7	G	7	7	G
z	0	0	0	0	0	0	0	0	0	0	0				0	0	0	0	0	0	0	0	0	0	0
POS	01				05				10						15					20					25

SHEET NR. : 981

LOADED CONNECTOR ASSEMBLY
(FOR EXAMPLE)

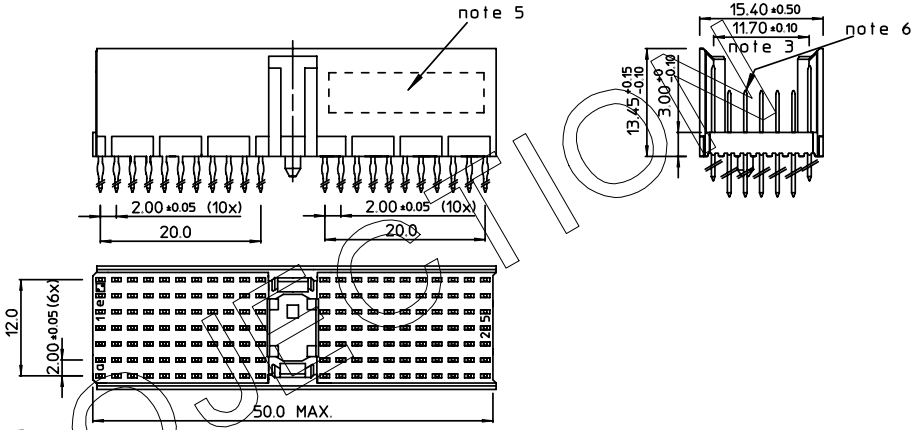

CONTACT OVERVIEW

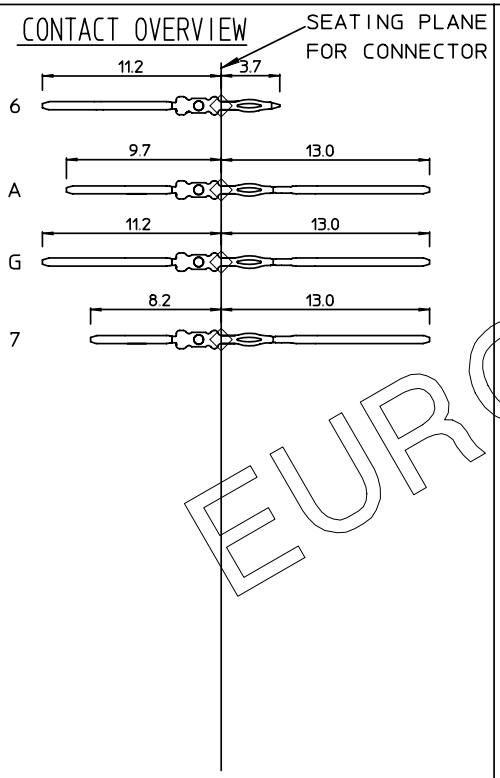

LAY-OUT P.C.B.-HOLE

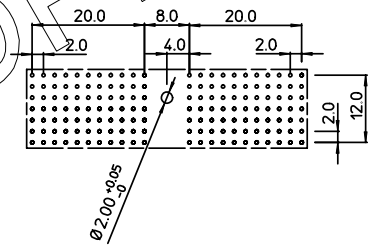

HM2P07PKJ2R5----

LEAD FREE INDICATOR : LF = LEAD FREE
(DIGIT 15 & 16)

PLATING CODE (DIGIT 13 AND 14)
(REF DWG No. BS,C ,201844,003)

NOTES:

1. THIS PRODUCT IS CSA APPROVED.
2. THIS PRODUCT IS UL RECOGNIZED.
3. MEASURED AT THE BOTTOM.
4. MATERIAL CONTACT: PHOSPHORBRONZE
   HOUSING: CREAM WHITE GLASSFILLED POLYESTER UL-94V0
5. CONNECTOR PRINTED WITH P/N AND DATE CODE.
6. FOR ACTUAL CONTACT LOADINGS, SEE LOADING PATTERN MATING SIDE.
7. SHAPE OF CONNECTOR HOUSING CAN ALTER DEPENDING ON PRODUCTION LOCATION.
8. THE PRODUCT (LF) MEETS EUROPEAN UNION DIRECTIVES AND OTHER COUNTRY REGULATIONS AS DESCRIBED IN GS-22-008
9. FOR RECOMMENDED PTH DIMENSIONS REFER DRAWING : BS,A ,201572,001

EUROPEAN PROJECTION

THIS IS OUR EXCLUSIVE PROPERTY. IT IS NOT TO BE COPIED, REPRINTED OR DISCLOSED TO A THIRD PARTY, NOR USED FOR MANUFACTURING WITHOUT OUR WRITTEN CONSENT, AND HAS TO BE RETURNED TO US IN CASE OF NO USAGE

DIT IS ONZE EIGENDOM EN MAG NOCH NAGEMAAKT, HERDRUKT, OVERGEMAAKT AAN DERDEN, NOCH VOOR FABRIKATIE GEBRUIKT WORDEN, ZONDER ONZE SCHRIFTELIJKE TOELATING. BIJ NIET GEBRUIK IS TERUGZENDING VERPLICHT.

1DEC ±0,2
2DEC ±0,1
ANGLES ±1°

WE RESERVE THE RIGHT TO CHANGE DIMENSIONS OR REQUIREMENTS WITHOUT PRIOR NOTICE.

ALL DIMENSIONS IN MM

APPR.	DATE	SIGN.
DRAFT	2000-01-11	G.Nys
CHECKED		
PROD. MGR.		
PR.ENG.MGR.		
PR.MGT.MGR.		

REFERENCES

LOADING PATTERN OVERVIEW

CAT. No. HM2P07PKJ2R5----

FCI www.fciconnect.com

SCALE

BS,C ,201843,898 — DRAWING No. | D — REVISION

CUSTOMER DRAWING

PDM: Rev:D STATUS: Released Printed: Dec 02, 2007