THIS DRAWING IS UNPUBLISHED. RELEASED FOR PUBLICATION 20
© COPYRIGHT 20 BY TYCO ELECTRONICS CORPORATION. ALL RIGHTS RESERVED.

PART NUMBER	REV	TERMINATOR	FEED TYPE	DESCRIPTION
1528836-1	A	LEADMAKER	MECH POST FEED	CUTS CARRIER
1528836-2	A	BENCH	MECH PRE FEED	CUTS CARRIER
1528836-6	A	LEADMAKER	MECH POST FEED	CONTINUOUS CARRIER
7-1528836-1	A	LEADMAKER	MECH POST FEED	-1 AND SPARE PARTS
7-1528836-2	A	BENCH	MECH PRE FEED	-2 AND SPARE PARTS
7-1528836-6	A	LEADMAKER	MECH POST FEED	-6 AND SPARE PARTS
7-1528836-7	A	-	-	SPARE PARTS KIT

SET UP GAGE 458637-3

LOC	DIST
A	66

REVISIONS

P	LTR	DESCRIPTION	DATE	DWN	APVD
	A	SEE ECO-07-024492	17OCT2007	LJL	MC

CRIMP DATA	KOSTAL TERMINAL	KOSTAL CRIMP SPECS	5
TERMINAL NAME: MLK 1.2 RECEPTACLE			

CRIMP	SIZE	TYPE	RANGE	
WIRE	1.17 [.046 IN]	F	0.10-<0.22mm² or 26 AWG	6
INSUL	1.57 [.062 IN]	O	1.00-1.50 [.039-.059 IN]	6

WIRE STRIP LENGTH 3.10-3.40 [.122-.134 IN] — APPL INSTRUCTIONS 408-8322 & 408-8490

TERMINAL APPL SPEC	KOSTAL DATA SHT	FEED
	MLK 1.2 -	8.00 [.315 IN]

TERMINALS APPLIED

TE TERM PN	MANUF TERM PN	-	-
1949523-1	2 21 24 49263 0	-	-
1949523-2	2 21 25 49263 0	-	-
1949523-3	2 21 40 49263 0	-	-
-	-	-	-

WIRE SIZE	CRIMP HEIGHT *	REF SETTING *
0.14mm² or 26AWG	0.73 ±0.03 [.029 ±.001 IN]	B 9
-	-	-
-	-	-
-	-	-
-	-	-
-	-	-
-	-	-
-	-	-
-	-	-
-	-	-
-	-	-

1. RECOMMENDED SPARE PARTS.
2. GREASE RAM, CAM, CAM FOLLOWER AND FEED ROD LIGHTLY.
3. CERTAIN TERMINALS REQUIRE LUBRICATION. REFER TO THE APPLICATOR INSTRUCTION SHEET FOR MORE INFORMATION.
4. LUBRICATE DAILY PER THE APPLICATOR INSTRUCTION SHEET SUPPLIED WITH THE APPLICATOR.
5. CRIMP DATA SUPPLIED BY THE TERMINAL MANUFACTURER.
6. WIRE AND INSULATION RANGES ARE THAT OF THE TERMINAL.
7. CUT TO LENGTH AT ASSEMBLY.

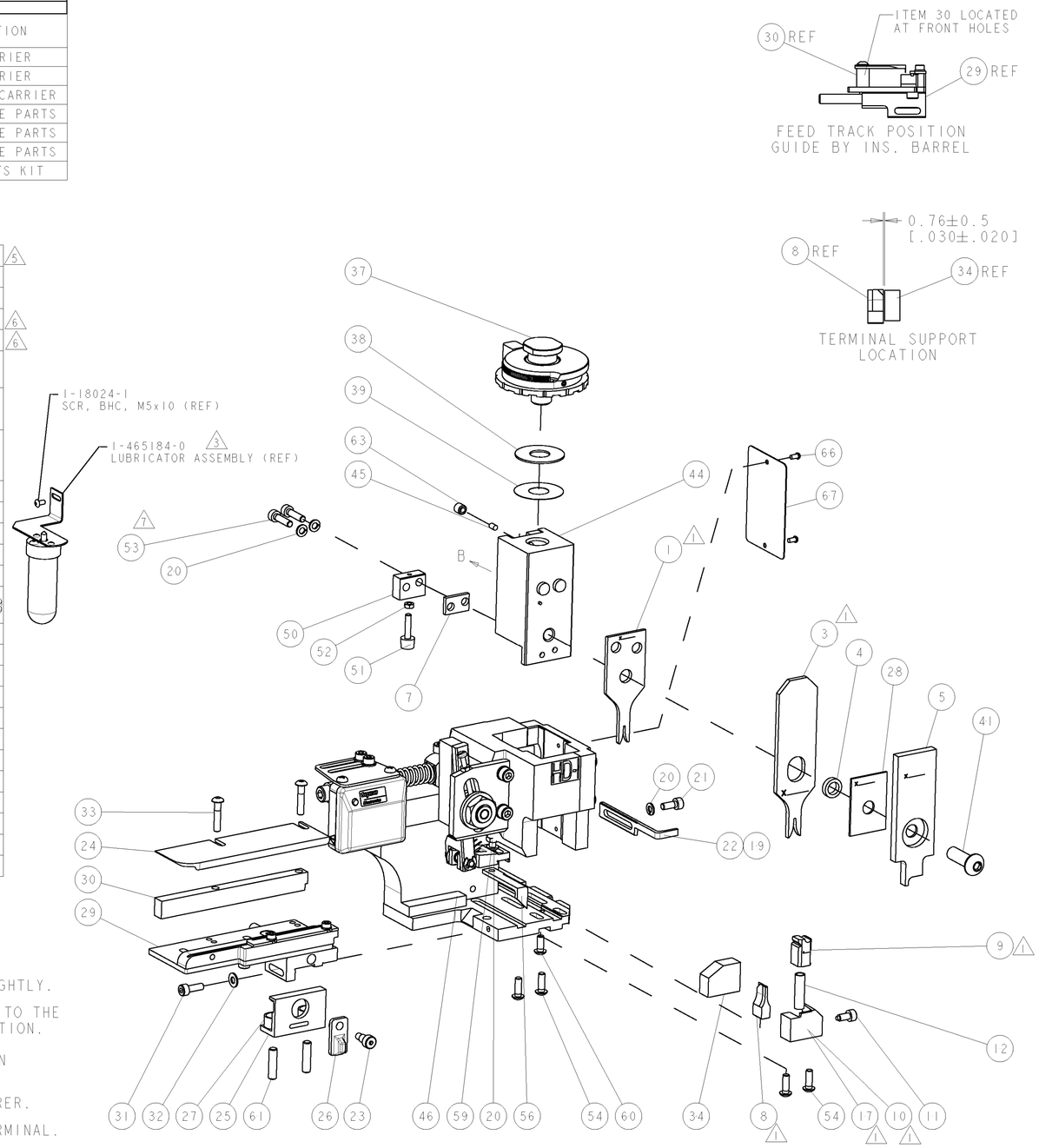

* WARNING
ON INSTALLATION, SET WIRE DISC TO LARGEST WIRE SIZE SETTING. USE OF SETTINGS BELOW MIN. REQUIRED CRIMP HEIGHT SETTING WILL CAUSE DAMAGE TO CRIMP TOOLING.

VIEW B ROTATED 180°

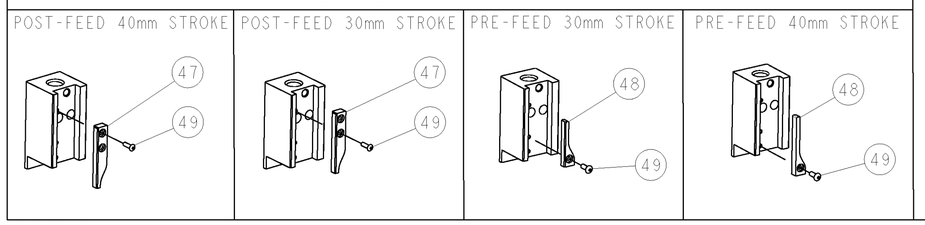

-77	-76	-72	-71	-6	-2	-1	PART NO	DESCRIPTION	ITEM NO
-	-	-	-	-	-	-	-	-	84
-	-	-	-	-	-	-	-	-	83
-	-	-	-	-	-	-	-	-	82
-	-	-	-	-	-	-	-	-	81
-	-	-	-	-	-	-	-	-	80
-	-	-	-	-	-	-	-	-	79
-	-	-	-	-	-	-	-	-	78
-	-	-	-	-	-	-	-	-	77
-	-	-	-	-	-	-	-	-	76
-	-	-	-	-	-	-	-	-	75
-	-	-	-	-	-	-	-	-	74
-77	-76	-72	-71	-6	-2	-1	PART NO	DESCRIPTION	ITEM NO

-77	-76	-72	-71	-6	-2	-1	PART NO	DESCRIPTION	ITEM NO
-	-	-	-	-	-	-	-	-	73
-	-	-	-	-	-	-	-	-	72
-	1	1	1	1	1	1	1338705-3	DOCUMENTATION PACKAGE	71
-	-	-	-	-	-	-	-	-	70
-	-	-	-	-	-	-	-	-	69
-	-	-	-	-	-	-	-	-	68
-	1	1	1	1	1	1	461264-5	PLATE, IDENTIFICATION	67
-	2	2	2	2	2	2	21017-2	SCREW, DRIVE	66
-	-	-	-	-	-	-	-	-	65
-	-	-	-	-	-	-	-	-	64
-	1	1	1	1	1	1	3-18031-0	SCR, SET, CUP POINT M6 X 6.0	63
-	-	-	-	-	-	-	-	-	62
-	2	2	2	2	2	2	2-18032-5	SCR, SET, FLT POINT M5 X 20.0	61
-	1	1	1	1	1	1	18024-7	SCR, BTN SKT HD CAP (M4 X 10.0)	60
-	1	1	1	1	1	1	5-18022-2	SCR, HEX HD CAP M4 X 8.0	59
-	-	-	-	-	-	-	-	-	58
-	-	-	-	-	-	-	-	-	57
-	1	1	1	1	1	1	1338685-1	PAWL, FEED	56
-	-	-	-	-	-	-	-	-	55
-	4	4	4	4	4	4	18024-8	SCR, BTN SKT HD CAP (M4 X 12.0)	54
7 -	2	2	2	2	2	2	1-18023-3	SCR, SKT HD CAP M4 X 16.0	53
-	1	1	1	1	1	1	18030-1	NUT, HEX, REG M3	52
-	1	1	1	1	1	1	811242-5	BUMPER, HOLD DOWN	51
-	1	1	1	1	1	1	690753-2	SPACER, TONKER	50
-	1	1	1	1	1	1	18024-3	SCR, BTN SKT HD CAP (M3 X 10.0)	49
-	-	1	-	-	1	-	1338675-1	CAM, UNIVERSAL PRE FEED	48
-	1	-	1	1	-	1	1338676-1	CAM, UNIVERSAL POST-FEED	47
-	1	1	1	1	1	1	1320999-3	APPLICATOR SUBASSEMBLY, HDI	46
-	1	1	1	1	1	1	690191-1	PLUG,NYLON	45
-	1	1	1	1	1	1	1338660-1	RAM	44
-	-	-	-	-	-	-	-	-	43
-	-	-	-	-	-	-	-	-	42
-	1	1	1	1	1	1	2-18024-6	SCR, BTN SKT HD CAP (M8 X 25.0)	41
-	-	-	-	-	-	-	-	-	40
-	1	1	1	1	1	1	690125-1	SHIM SUB-ASSY	39
-	1	1	1	1	1	1	469367-7	SHIM	38
-	1	1	1	1	1	1	879103-3	FINE ADJUST HEAD ASSEMBLY	37
-	-	-	-	-	-	-	-	-	36
-	-	-	-	-	-	-	-	-	35
-	1	1	1	1	1	1	2-1320934-5	SUPPORT, TERMINAL	34
-	2	2	2	2	2	2	1-18024-0	SCR, BTN SKT HD CAP (M4 X 20.0)	33
-	1	1	1	1	1	1	18027-2	WASHER, FLAT, REG M4	32
-	1	1	1	1	1	1	1-18023-2	SCR, SKT HD CAP M4 X 12.0	31
-	1	1	1	1	1	1	1-1320908-7	SPACER, STRIP GUIDE	30
-	1	1	1	1	1	1	1-1633073-3	STRIP GUIDE ASSEMBLY	29
-	1	1	1	1	1	1	1-455888-0	SPACER, CRIMPER	28
-	2	2	2	2	2	2	1-22284-0	SPRING, COMPRESSION	27
-	1	1	1	1	1	1	356835-1	LEVER, DRAG RELEASE	26
-	1	1	1	1	1	1	240792-1	DRAG, TERMINAL	25
-	1	1	1	1	1	1	1320928-1	PLATE, STRIP GUIDE	24
-	1	1	1	1	1	1	980371-4	SCR, SKT HD SHLDR 5.0 DIA X 6.0	23
-	1	-	1	1	-	1	690472-2	STRIPPER	22
-	1	1	1	1	1	1	1-18023-1	SCR, SKT HD CAP M4 X 10.0	21
-	4	4	4	4	4	4	18025-2	WASHER, SPRG LOCK, REG M4	20
-	-	1	-	-	1	-	690472-1	STRIPPER	19
-	-	-	-	-	-	-	-	-	18
1 -	1	-	-	1	-	-	1338684-1	SHEAR HOLDER, FRONT	17
-	-	-	-	-	-	-	-	-	16
-	-	-	-	-	-	-	-	-	15
-	-	-	-	-	-	-	-	-	14
-	-	-	-	-	-	-	-	-	13
-	1	1	1	1	1	1	3-22280-3	SPRING, COMPRESSION	12
-	1	1	1	1	1	1	356885-4	STOP, SHEAR	11
1 -	-	1	1	-	1	1	1320921-1	SHEAR HOLDER, FRONT, CUT	10
1 -	1	1	1	1	1	1	462006-1	FLOATING SHEAR, FRONT	9
1	2	2	2	1	1	1	6-1633138-9	ANVIL, COMBINATION	8
-	1	1	1	1	1	1	8-240641-6	SPACER	7
-	-	-	-	-	-	-	-	-	6
-	1	1	1	1	1	1	2-455889-0	DEPRESSOR, SHEAR	5
-	1	1	1	1	1	1	238011-2	BLOCK, CRIMPER SPACER	4
1	2	2	2	1	1	1	1-1633510-5	CRIMPER, INSUL O	3
-	-	-	-	-	-	-	-	-	2
1	2	2	2	1	1	1	5-568176-2	CRIMPER, WIRE	1
-77	-76	-72	-71	-6	-2	-1	PART NO	DESCRIPTION	ITEM NO

THIS DRAWING IS CONTROLLED DOCUMENT FOR TYCO ELECTRONICS CORPORATION. IT IS SUBJECT TO CHANGE WITHOUT NOTICE. ANY OTHER ORGANIZATION SHOULD BE CONTACTED FOR THE LATEST REVISION.

DIMENSIONS: mm [IN]
TOLERANCES UNLESS OTHERWISE SPECIFIED: 0 PLC ±; 1 PLC ±; 2 PLC ±; 3 PLC ±; 4 PLC ±; ANGLES ±
MATERIAL - -
FINISH - -

DWN 25SEP2007 L LOFTHOUSE
CHK - -
APVD 25SEP2007 M CLIFFORD
PRODUCT SPEC -
APPLICATION SPEC See Table
WEIGHT -

Tyco Electronics — Tyco Electronics, Harrisburg, PA 17105-3608

NAME: FINE ADJUST SIDE FEED HDI APPLICATOR -

SIZE	CAGE CODE	DRAWING NO	RESTRICTED TO
A1	00779	C-1528836	-

CUSTOMER DRAWING — SCALE 3:5 — SHEET 1 OF 1 — REV A