CONFIDENTIAL & PROPRIETARY

THIS INFORMATION IS CONFIDENTIAL AND PROPRIETARY TO LAIRD TECHNOLOGIES. IT MAY NOT BE DISCLOSED TO ANYONE, OTHER THAN LAIRD TECHNOLOGIES PERSONNEL, WITHOUT WRITTEN AUTHORIZATION FROM LAIRD TECHNOLOGIES.

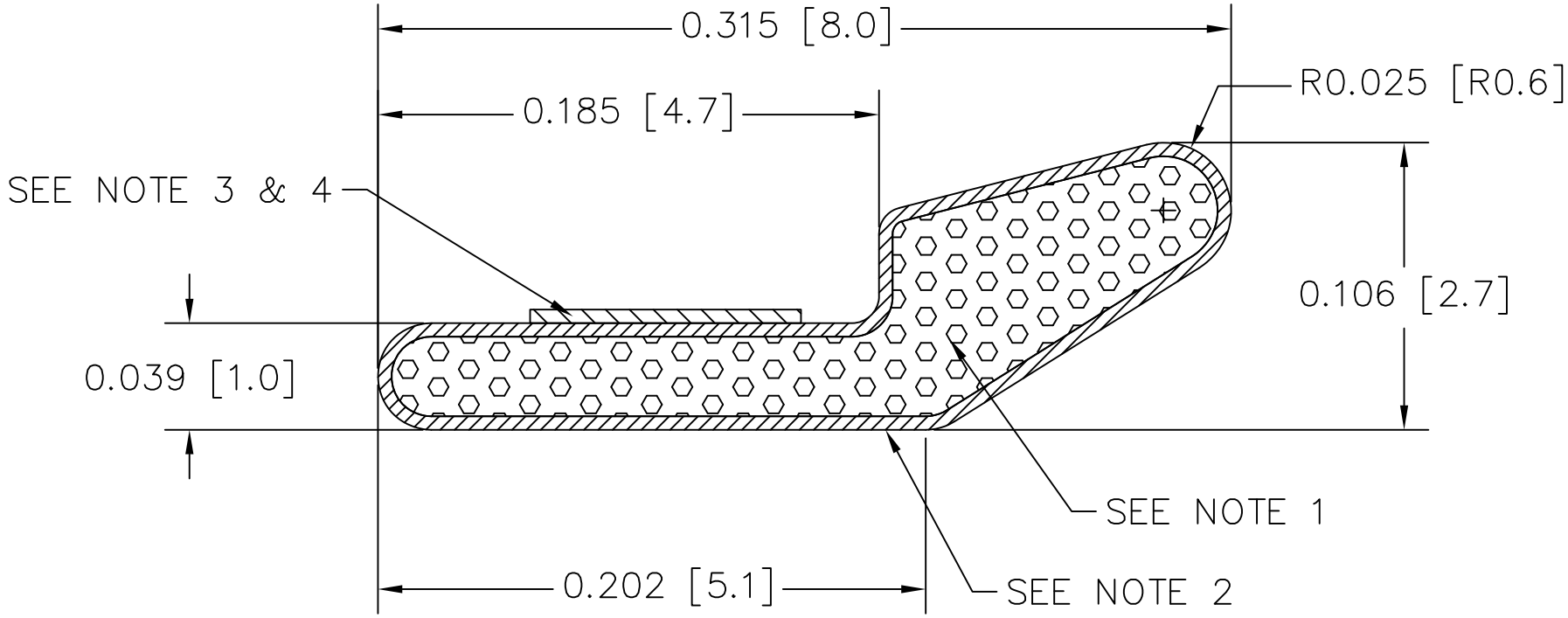

NOTES:

1. FOAM: POLYURETHANE
2. FABRIC: NICKEL NRS FR EcoGreen
3. TAPE: .100" TAPE HI-TEMP
4. LINER: NO EXTENDED RELEASE LINER
5. FABRIC SEAM LOCATION MAY VARY.
6. CARRIER: NO CARRIER
7. THIS PART IS RoHS COMPLIANT AND MEETS THE REQUIREMENTS OF LT-GES-001

REVISIONS:	TITLE: SHIELDING GASKET	DRAWN GIBILTERRA	DATE 3/11/13	SCALE: 1/1	DIMENSIONS ARE IN INCHES. UNLESS OTHERWISE SPECIFIED, TOLERANCES ARE AS FOLLOWS:	Laird TECHNOLOGIES
		CHECKED BY: FJG		DATE 3/11/13	DECIMALS .XX ± .03 .XXX ± .020 ANGLES ± 1/2°	LENGTH 0" – 6" ± .030" 6" – 11" ± .050" 11" – 48" ± .100" 48" – 70" ± .187" 70" – 144" ± .250"
	Dwg. or Part No. 4097-PA-51G	RELEASED BY: FJG		DATE 3/11/13		
	REV. 0					