CR Magnetics **CR8400** Series of Wire Lead Current Transformers are available in a wide range of sizes and materials to meet any AC current sensing needs. Our **General Purpose** designs are made from the highest quality silicon steel cores available, and meet most of the common AC current measurement needs. Our **Revenue Grade** CTs (**-N**) are made from a nickel alloy core which provides the most linear response over temperature and current level. A line of **Ground Fault** (**-G**) CTs for measuring low AC currents including electrical shields. The **High Frequency** (**-F**) products are designed for high frequency applications such as high frequency power supplies and motor drives.

CR8400 SERIES

Applications
Motor Load Measurement
Power Meters
High Frequency Current Sensing
Ground Fault Sensing

Features
High Ratio
Standard Footprints

Specifications

Maximum Continuous Primary Current	4 X Ir
Insulation Voltage	3500 Vac/1min
Storage Temp.	-45°C thru +85 °C
Operating Temp. General Purpose & Nickel	-40°C thru +85 °C
Operating Temp. High Frequency	-40°C thru +65 °C

Regulatory Agencies

GENERAL PURPOSE CURRENT TRANSFORMERS

Part Number	I_r	Vmax RMS	Te (typ.)	DCR Ω	Frequency
CR8401-1000	10	2.2	1009	49	20 - 1 KHz
CR8410-1000	20	3.1	1012	41	20 - 1 KHz
CR8420-1000	50	5.2	1018	22	20 - 1 KHz
CR8420-2000	75	9.0	1983	90	20 - 1 KHz
CR8448-1000	30	6.3	990	26	20 - 1 KHz
CR8448-2000	50	13.7	2046	106	20 - 1 KHz
CR8449-1000	50	11.6	1016	35	20 - 1 KHz
CR8449-2000	75	23	2046	150	20 - 1 KHz
CR8450-1000	100	16.5	1021	21	20 - 1 KHz
CR8450-2000	200	32	2037	73	20 - 1 KHz

REVENUE GRADE CURRENT TRANSFORMERS

Part Number	I_r	Vmax RMS	Te (typ.)	DCR Ω	Frequency
CR8448-2500-N	40	6.6	2510	134	20 - 1 KHz
CR8449-2500-N	50	10.0	2490	187	20 - 1 KHz
CR8450-2500-N	75	12.0	2512	143	20 - 1 KHz
CR8459-2000-N	200	11.5	2011	74	20 - 1 KHz

GROUND FAULT CURRENT TRANSFORMERS

Part Number	I_r	Vmax RMS	Te (typ.)	DCR Ω	Frequency
CR8401-1000-G	4	0.6	1005	49	20 - 1 KHz
CR8410-1000-G	7	0.8	1007	38	20 - 1 KHz
CR8420-1000-G	20	1.4	1011	44	20 - 1 KHz

HIGH FREQUENCY CURRENT TRANSFORMERS

Part Number	I_r	Vmax RMS	Te (typ.)	DCR Ω	Frequency
CR8448-2000-F	50	3.9	2015	90	20 - 200 KHz
CR8449-2000-F	75	7.4	2017	109	20 - 200 KHz
CR8450-2000-F	100	8.5	2020	63	20 - 200 KHz

I_r = Maximum Input Current to be linearly sensed V_{max} = Maximum Voltage (Saturation) CT will develop

T_e = Effective turns ratio including losses (All Specifications tested at 60 Hz)

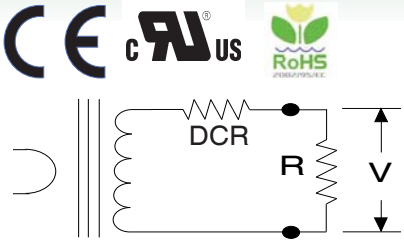

$$V = \frac{I \times R}{T_e} \qquad V_L = V_{max} - \left[\frac{I \times DCR}{T_e} \right]$$

For best linearity, choose R such that $V < 0.8\ V_L$

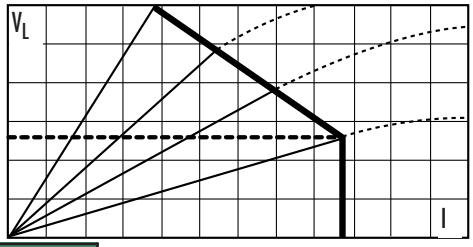

PACKAGE DIMENSIONS AND OUTLINE (mm/in)
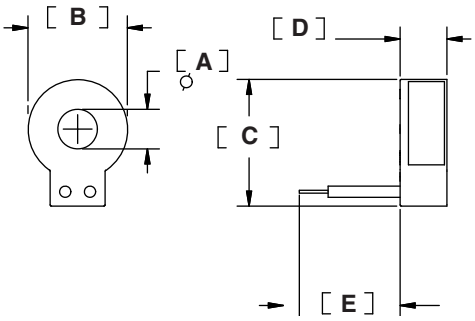
Part Number Prefix	A min	B max	C max	D max	E Typ	Part Number Prefix	A min	B max	C max	D max	E Typ
CR8401	6.99 .275	17.53 .690	22.35 .880	8.26 .325	57.8 2.275	CR8449	9.14 .354	26.0 1.02	31.8 1.25	17.0 .67	100 3.94
CR8410	9.0 .35	22 .87	27.8 1.09	8.20 .323	73 2.87	CR8450	13.08 .515	36.83 1.45	43.18 1.70	13.97 .55	100 3.94
CR8420	15.0 .59	30.0 1.18	36.0 1.41	9.2 .36	100 3.94	CR8459	19 .75	48 1.89	60 2.36	17.5 .67	200 7.88
CR8448	7.11 .280	23.42 .92	29.46 1.16	11.05 .435	100 3.94