Alle Rechte vorbehalten/ *All rights reserved*

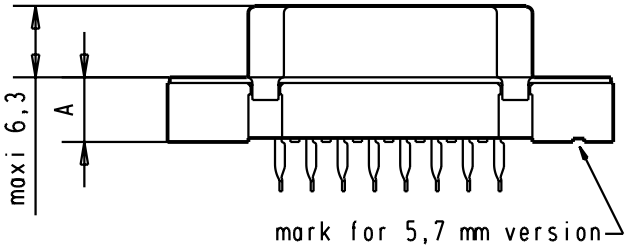

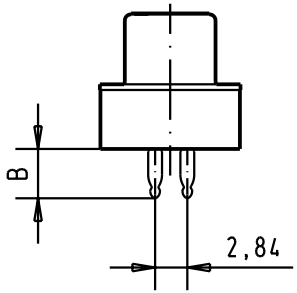

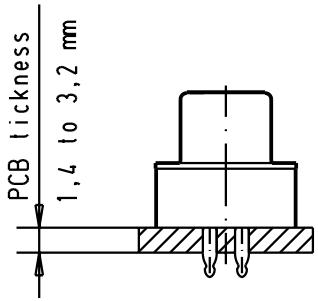

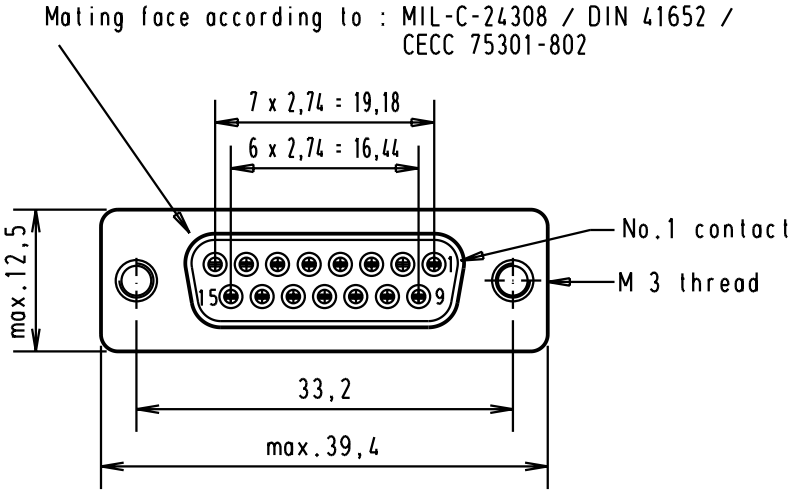

PCB layout hole
component side
(PCB holes plating : Tin)

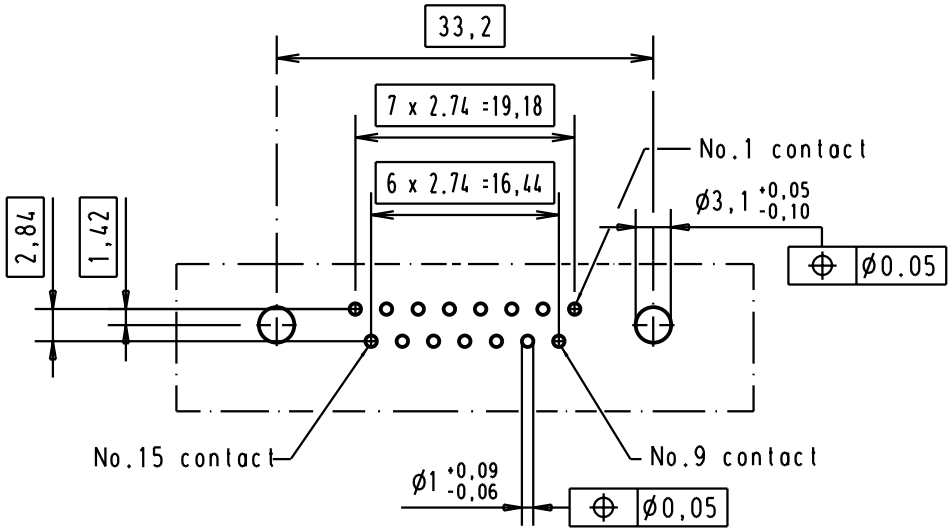

09662147501	3	6	4.20				
09662146501	2	6	4.20				
09662145501	0.76 µm Au	6	4.20				
09662147505	3	5.7	4.35		31079	29-AUG-02	CV
09662146505	2	5.7	4.35		26574	14/02/00	jfb
09662145505	0.76 µm Au	5.7	4.35		16236	30/06/95	jfb
Part number	Performance level	A ±0.2	B ±0.2		Mod.	Dat.	Name

	Dat.	Name
Detail.	30/03/94	jfb
Insp.		
Stand.		

All Dim. in mm
Orig. Size DIN A 3

D-Sub 15 poles straight female connector with press-in termination,version nut.

Maßstab/ *Scale* 2,5:1

HARTING EURL
F-95972 Paris

TB 0966214x50x

Sub.

Blatt/ *Page* 2/