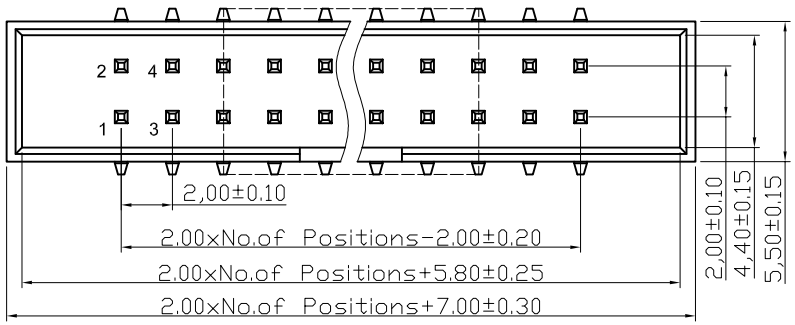

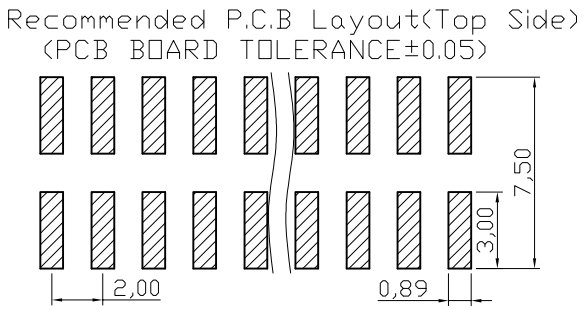

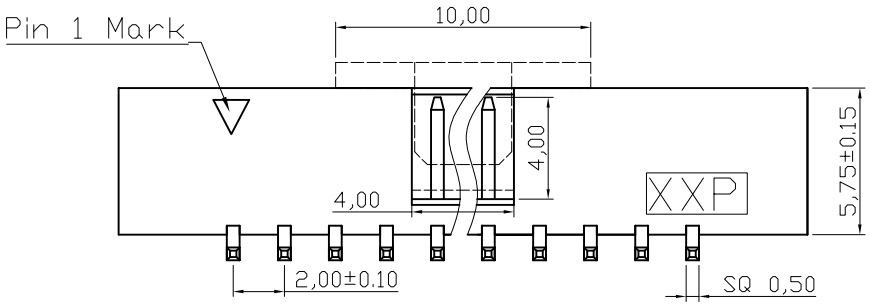

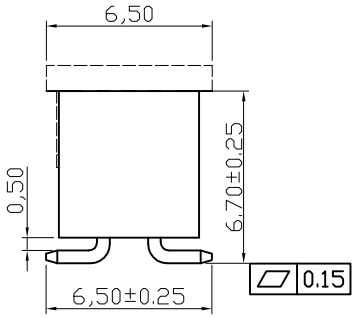

NOTES:

MATERIAL
④ 1.Insulator Material:PA9T+30%GF(UL94V-0),Black
2.Contact Material : Brass
3.Contact Plating : Gold flash Over 50μ"Ni
ELECTRICAL
1.Current Rating : 1.5AMP
2.Withstand Voltage : 500V AC/DC
3.Contact Resistance : 20mΩ max
4.Insulation Resistance: 1000MΩ min
ENVIRONMENTAL
1.Operation Temperature: -40°C to +105°C
2.Packing :
AWHW xxG-SMD-200: Tube + Cap ③
AWHW xxG-SMD-200-R: Tape&Reel + Cap

Order Information :
xx: 10,14,16,20,24,26,30,34,40,44,50,60

RoHS compliant
Unit:mm

Scale	Free
TOLERANCE	
X.X	±0.40
X.XX	±0.25
X.XXX	±0.15
Angle°	±3°

Id.	Modification	Date	Name
④	Change the material to PA9T	22.03.2016	Winnie
③	Add new P/N	21.02.2012	Lucas
②	Update	29.06.2009	Dean
①	Drawn	25.01.2006	Alex

	Date	Name
Drawn	25.01.2006	Alex
Approved	22.03.2016	Winnie

ASSMANN WSW components

Customer-No.

ASSMANN WSW-No.
③ AWHW xxG-SMD-200
AWHW xxG-SMD-200-R

Drawing-No.
ASS 2319 CO
rev04

Replace
Sheet

SVxxx