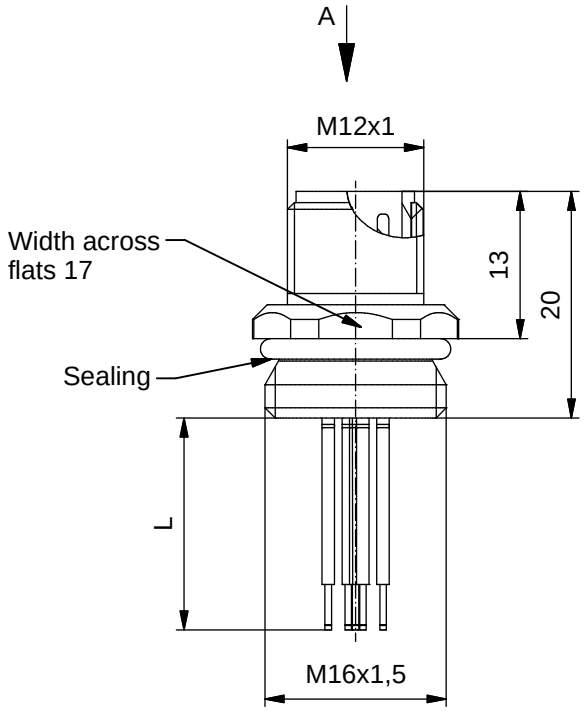

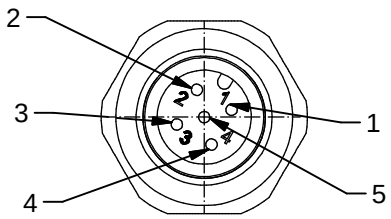

Technical specification:

Rated voltage: IEC 61076-2-101	4pos 250 V	5pos 60 V
Current rating: IEC 61076-2-101	4 A at 40℃	
Insulation resistance: IEC 60512	>=100 MΩ	
Pollution degree: IEC 60664-1	3/2	
Degree of protection: DIN 40050-9	IP 69K, in mated condition	
Temperature range: IEC 60664-1	-30℃ ... +105℃	
Mating cycles: IEC 60512-9a	>=100	

Materials:

Contact:	CuZn
Contact plating:	Nickel, gold plated
Contact carrier:	PP GF, UL 94
Sealing:	FPM
Socket housing:	1.4404, stainless steel
Grouting:	Polyurethane-resin, UL 94

Installation specification:

recommended torque:	1-1,2 Nm
Conec installation tool:	Torque wrench: 36-000200 Insert across flats 17: 36-000230

Contact assignment:

1 brown
2 white
3 blue
4 black
5 green-yellow

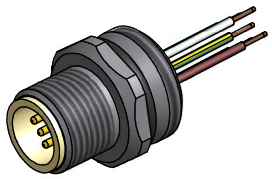

Part no:	Description:	Pos	Length L:	Wire:
43-01020	SAL - FB - 12 - FS4 - 0,5	4	0,5m	AWG 24 PVC, UL
43-xxxxx	SAL - FB - 12 - FS4 - ...	4	x	
43-01021	SAL - FB - 12 - FS5 - 0,5	5	0,5m	
43-xxxxx	SAL - FB - 12 - FS5 - ...	5	x	

DO NOT ALTER CAD DRAWING BY HAND
Directive 2002/95/EC RoHS compliant

Index: c 20.04.12 fro Ä4288
Illustration adapted

tolerance of wire: L <= 0,5m: L + 20mm
L > 0,5m: L + 4%

general tolerance: 0 ± 0,50mm
0,0 ± 0,25mm
0,00 ± 0,10mm

THIS DRAWING MAY NOT BE COPIED OR REPRODUCED IN ANY WAY, AND MAY NOT BE PASSED ON TO A THIRD PARTY WITHOUT WRITTEN PERMISSION. OWNERSHIP AND COPYRIGHT OF CONEC GmbH

dim. in mm

	date	name
drawn	01.03.07	Fromm
appd.	01.03.07	Mankopf

title:
Male socket M12x1 with wire, frontmounting, FB

dwg no:
43K1A293

part no: