THIS DRAWING IS UNPUBLISHED. RELEASED FOR PUBLICATION – –, .
© COPYRIGHT – By – ALL RIGHTS RESERVED.

LOC	DIST
CM	0

REVISIONS

P	LTR	DESCRIPTION	DATE	DWN	APVD
	R3	REVISED PER ECO-11-014117	12JUL11	HMR	SM

1. MATERIAL:
   CONNECTOR: POLYESTER UL94V-0 (WHITE).
   CONTACTS: 0.30 [.012] THK COPPER ALLOY.
2. CONTACT ACCEPT #24 AWG WIRE WITH 2.41 [.095] MAXIMUM INSULATION DIAMETER.
3. CONNECTOR MATES WITH 1.57±0.20[.062±.008] THICK PC BOARD.
4. HOUSING FEATURES: CLOSED END, STANDARD MOUTH WITH MOUNTING EARS.
5. CONTACT FINISH: BRIGHT TIN-LEAD 0.00203[.000080] MIN THK.
6. CONTACT FINISH: MATTE WHISKER MITIGATED TIN 0.00203[.000080] MIN THICKNESS OVER NICKEL UNDERPLATE.
7. OBSOLETE PARTS: OBSOLETE CIS STREAMLINING PER D.RENAUD/D.SINISI

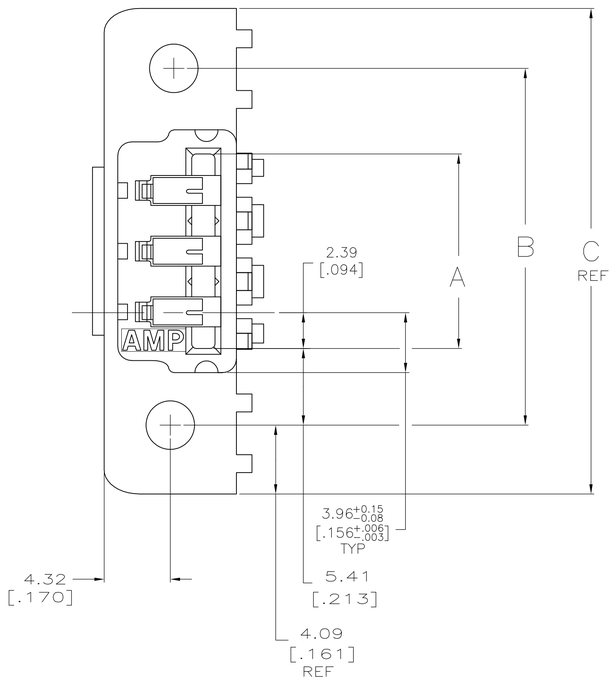

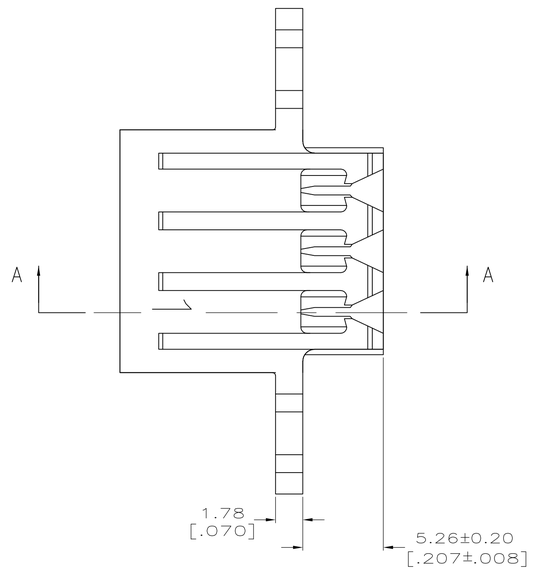

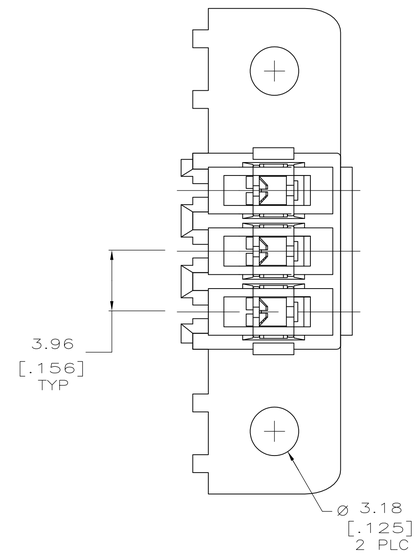

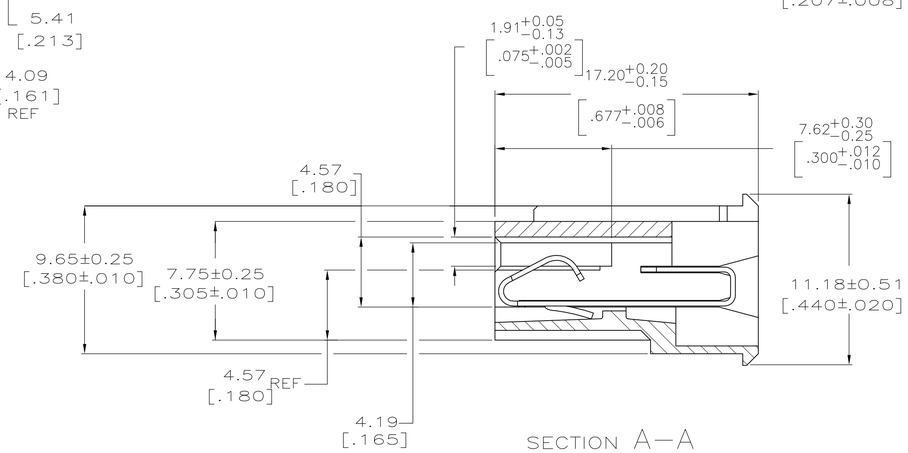

SECTION A–A

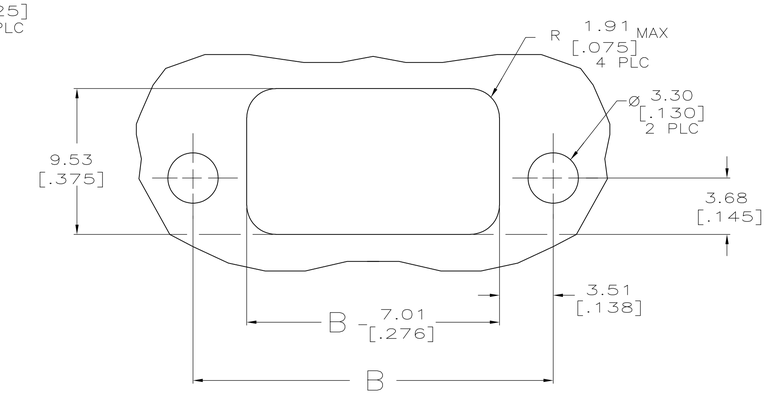

RECOMMENDED PANEL CUTOUT

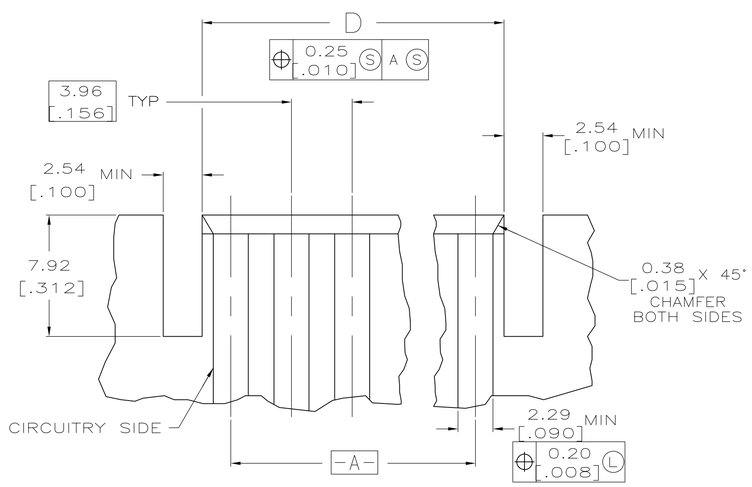

RECOMMENDED P.C. BOARD LAYOUT

	CONTACT FINISH	D	C	B	A	NO. OF CIRCUITS	PART NUMBER
	6	95.50 [3.760]	114.91 [4.524]	106.73 [4.202]	95.91 [3.776]	24	5-640867-4
		91.54 [3.604]	110.95 [4.368]	102.77 [4.046]	91.95 [3.620]	23	5-640867-3
		87.58 [3.448]	106.98 [4.212]	98.81 [3.890]	87.99 [3.464]	22	5-640867-2
		83.62 [3.292]	103.02 [4.056]	94.84 [3.734]	84.02 [3.308]	21	5-640867-1
		79.65 [3.136]	99.06 [3.900]	90.88 [3.578]	80.06 [3.152]	20	5-640867-0
		71.73 [2.824]	91.14 [3.588]	82.96 [3.266]	72.14 [2.840]	18	4-640867-8
		59.84 [2.356]	79.25 [3.120]	71.07 [2.798]	60.25 [2.372]	15	4-640867-5
		47.96 [1.888]	67.36 [2.652]	59.18 [2.330]	48.36 [1.904]	12	4-640867-2
		36.07 [1.420]	55.47 [2.184]	47.29 [1.862]	36.47 [1.436]	9	3-640867-9
		24.18 [.952]	43.59 [1.716]	35.41 [1.394]	24.59 [.968]	6	3-640867-6
		12.29 [.484]	31.70 [1.248]	23.52 [.926]	12.70 [.500]	3	3-640867-3
SUPERSEDED 7	5	95.50 [3.760]	114.91 [4.524]	106.73 [4.202]	95.91 [3.776]	24	~~2-640867-4~~
		91.54 [3.604]	110.95 [4.368]	102.77 [4.046]	91.95 [3.620]	23	~~2-640867-3~~
		87.58 [3.448]	106.98 [4.212]	98.81 [3.890]	87.99 [3.464]	22	~~2-640867-2~~
		83.62 [3.292]	103.02 [4.056]	94.84 [3.734]	84.02 [3.308]	21	~~2-640867-1~~
		79.65 [3.136]	99.06 [3.900]	90.88 [3.578]	80.06 [3.152]	20	~~2-640867-0~~
		71.73 [2.824]	91.14 [3.588]	82.96 [3.266]	72.14 [2.840]	18	~~1-640867-8~~
		59.84 [2.356]	79.25 [3.120]	71.07 [2.798]	60.25 [2.372]	15	~~1-640867-5~~
SUPERSEDED 7		47.96 [1.888]	67.36 [2.652]	59.18 [2.330]	48.36 [1.904]	12	~~1-640867-2~~
		36.07 [1.420]	55.47 [2.184]	47.29 [1.862]	36.47 [1.436]	9	~~640867-9~~
		24.18 [.952]	43.59 [1.716]	35.41 [1.394]	24.59 [.968]	6	~~640867-6~~
OBSOLETE		12.29 [.484]	31.70 [1.248]	23.52 [.926]	12.70 [.500]	3	~~640867-3~~

THIS DRAWING IS A CONTROLLED DOCUMENT.

DIMENSIONS: mm [INCHES]

TOLERANCES UNLESS OTHERWISE SPECIFIED:
0 PLC ± –
1 PLC ± –
2 PLC ± 0.13 [.005]
3 PLC ± –
4 PLC ± –
ANGLES ± –

MATERIAL: SEE NOTE 1
FINISH: SEE NOTE 1

METRIC

DWN K. SALMON 10-31-91
CHK R. SWING 10-31-91
APVD –
PRODUCT SPEC –
APPLICATION SPEC –
WEIGHT –

TE Connectivity

NAME: MTA-156 CARD EDGE CONNECTOR ASSEMBLY, 24 AWG,PANEL MOUNT

SIZE	CAGE CODE	DRAWING NO	RESTRICTED TO
A1	00779	C-640867	–

CUSTOMER DRAWING | SCALE 5:1 | SHEET 1 OF 1 | REV R3

4805 (3/11)