THIS DRAWING IS UNPUBLISHED. RELEASED FOR PUBLICATION 20
© COPYRIGHT 20 BY - ALL RIGHTS RESERVED.

PART NUMBER	REV	TERMINATOR	FEED TYPE	DESCRIPTION
1530503-1	A	LEADMAKER	MECH POST FEED	CUTS CARRIER
1530503-2	A	BENCH	MECH PRE FEED	CUTS CARRIER
1530503-6	A	LEADMAKER	MECH POST FEED	CONTINUOUS CARRIER
7-1530503-1	A	LEADMAKER	MECH POST FEED	-1 AND SPARE PARTS
7-1530503-2	A	BENCH	MECH PRE FEED	-2 AND SPARE PARTS
7-1530503-6	A	LEADMAKER	MECH POST FEED	-6 AND SPARE PARTS
7-1530503-7	A	-	-	SPARE PARTS KIT

CRIMP DATA TE TERMINAL TE CRIMP SPECS

TERMINAL NAME: SPLICE, AMPLIVAR, MINIATURE

CRIMP	SIZE	TYPE	RANGE
WIRE	.070 [1.78mm]	F	400-1300 CMA
INSUL	-	-	-

WIRE STRIP LENGTH .119-.181 [3.02-4.60mm]

APPL INSTRUCTIONS 408-8322 & 408-8490

TERMINAL 114-2006 - APPL SPEC - -

FEED .330 [8.38mm]

TERMINALS APPLIED

62194-6	-	-	-
-	-	-	-
-	-	-	-
-	-	-	-
-	-	-	-

WIRE SIZE	CRIMP HEI *	REF SETTING
(1)24 AWG + .025 SOLID	1.17 ±0.05mm [.046 ±.002]	D4
(1)24 AWG + (1)22 AWG	1.17 ±0.05mm [.046 ±.002]	D4
(2)24 AWG	1.17 ±0.05mm [.046 ±.002]	D3
-	-	-
-	-	-
-	-	-
-	-	-
-	-	-
-	-	-
-	-	-
-	-	-

1. RECOMMENDED SPARE PARTS.
2. GREASE RAM, CAM, CAM FOLLOWER AND FEED ROD LIGHTLY.
3. CERTAIN TERMINALS REQUIRE LUBRICATION. REFER TO THE APPLICATOR INSTRUCTION SHEET FOR MORE INFORMATION.
4. LUBRICATE DAILY PER THE APPLICATOR INSTRUCTION SHEET SUPPLIED WITH THE APPLICATOR.

* WARNING
ON INSTALLATION, SET WIRE DISC TO LARGEST WIRE SIZE SETTING. USE OF SETTINGS BELOW MIN. REQUIRED CRIMP HEIGHT SETTING WILL CAUSE DAMAGE TO CRIMP TOOLING.

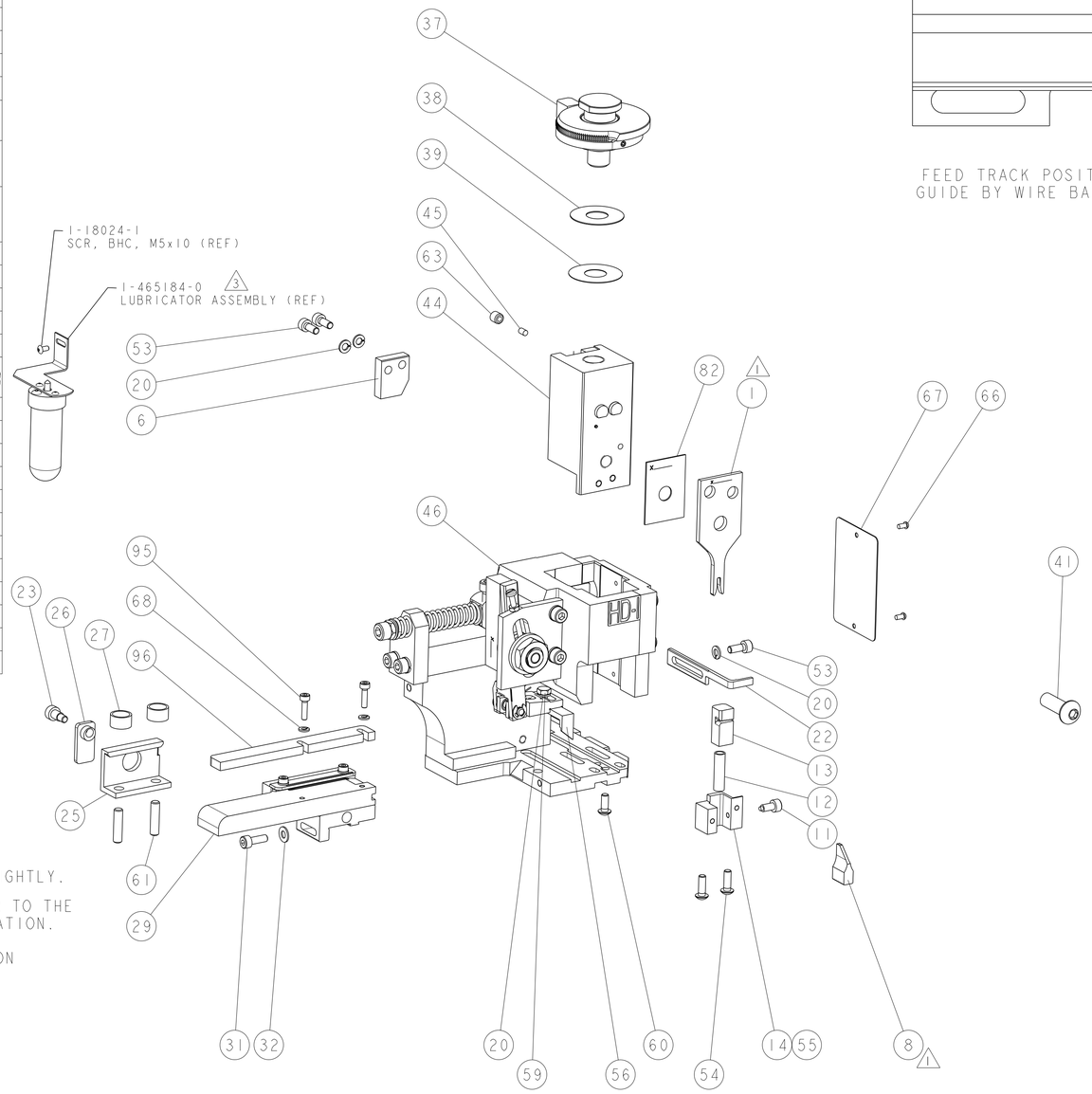

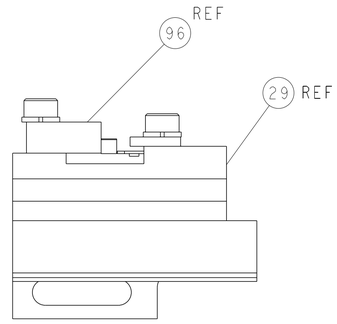

FEED TRACK POSITION
GUIDE BY WIRE BARREL

SET UP GAGE
458637-3

LOC	DIST
A	66

REVISIONS

P	LTR	DESCRIPTION	DATE	DWN	APVD
	A	RELEASED	06JUN2011	RK	TE
	A1	ECR-11-014655	14JUL2011	MY	TE

-	1	1	1	1	1	1	2-189124-6	GUIDE, FRONT STRIP	*	96
-	2	2	2	2	2	2	18023-5	SCR, SKT HD CAP M3 X 12.0	*	95
-	1	1	1	1	1	1	455888-6	SPACER, CRIMPER	*	82
-	1	1	1	1	1	1	1338705-3	DOCUMENTATION PACKAGE	*	71
-	2	2	2	2	2	2	18025-1	WASHER, SPRG LOCK, REG M3	*	68
-	1	1	1	1	1	1	461264-5	PLATE, IDENTIFICATION	*	67
-	2	2	2	2	2	2	21017-2	SCREW, DRIVE	*	66
-	1	1	1	1	1	1	3-18031-0	SCR, SET, CUP POINT M6 X 6.0	*	63
-	2	2	2	2	2	2	2-18032-5	SCR, SET, FLT POINT M5 X 20.0	*	61
-	1	1	1	1	1	1	18024-7	SCR, BTN SKT HD CAP (M4 X 10.0)	*	60
-	1	1	1	1	1	1	5-18022-2	SCR, HEX HD CAP M4 X 8.0	*	59
-	1	1	1	1	1	1	1338683-4	FEED PAWL	*	56
-	-	-	-	-	-	-	1338723-1	HOLDER, SHEAR, REAR [NO CUT]	*	55
-	2	2	2	2	2	2	18024-8	SCR, BTN SKT HD CAP (M4 X 12.0)	*	54
-	2	2	2	2	2	2	1-18023-1	SCR, SKT HD CAP M4 X 10.0	*	53
-	1	1	1	1	1	1	18024-3	SCR, BTN SKT HD CAP (M3 X 10.0)	*	49
-	-	1	-	-	1	-	1338675-1	CAM, UNIVERSAL PRE FEED	*	48
-	1	-	1	1	-	1	1338676-1	CAM, UNIVERSAL POST-FEED	*	47
-	1	1	1	1	1	1	1-1320999-1	APPLICATOR SUBASSEMBLY, HDI	*	46
-	1	1	1	1	1	1	690191-1	PLUG,NYLON	*	45
-	1	1	1	1	1	1	1633724-1	RAM, (SIDE FEED)	*	44
-	1	1	1	1	1	1	2-18024-6	SCR, BTN SKT HD CAP (M8 X 25.0)	*	41
-	1	1	1	1	1	1	690125-1	SHIM SUB-ASSY	*	39
-	1	1	1	1	1	1	469367-9	SHIM	*	38
-	1	1	1	1	1	1	879103-4	FINE ADJUST HEAD ASSEMBLY	*	37
-	1	1	1	1	1	1	18027-2	WASHER, FLAT, REG M4	*	32
-	1	1	1	1	1	1	1-18023-2	SCR, SKT HD CAP M4 X 12.0	*	31
-	1	1	1	1	1	1	1633082-7	STRIP GUIDE ASSEMBLY	*	29
-	2	2	2	2	2	2	1-22284-0	SPRING, COMPRESSION	*	27
-	1	1	1	1	1	1	356835-1	LEVER, DRAG RELEASE	*	26
-	1	1	1	1	1	1	240792-1	DRAG, TERMINAL	*	25
-	1	1	1	1	1	1	980371-4	SCR, SKT HD SHLDR 5.0 DIA X 6.0	*	23
-	1	1	1	1	1	1	690472-2	STRIPPER	*	22
-	1	1	1	1	1	1	1-18023-1	SCR, SKT HD CAP M4 X 10.0	*	21
-	4	4	4	4	4	4	18025-2	WASHER, SPRG LOCK, REG M4	*	20
1 -	1	1	1	1	1	1	1320920-1	SHEAR HOLDER, REAR [CUTTING]	*	14
1 -	1	1	1	1	1	1	1-690463-8	FLOATING SHEAR, REAR	*	13
-	1	1	1	1	1	1	3-22280-3	SPRING, COMPRESSION	*	12
-	1	1	1	1	1	1	356885-4	STOP, SHEAR	*	11
1 1	2	2	2	1	1	1	1-1633733-2	ANVIL, WIRE	*	8
-	-	-	-	-	-	-	-	-	*	7
-	1	1	1	1	1	1	690468-2	DEPRESSOR SHEAR, REAR	*	6
-	-	-	-	-	-	-	-	-	*	4
1	2	2	2	-	-	-	-	-	*	3
-	-	-	-	-	-	-	-	-	*	2
1 1	2	2	2	1	1	1	3-456404-5	CRIMPER, WIRE PREMIUM	*	1
	-77	-76	-72	-71	-6	-2	-1	PART NO		DESCRIPTION	ITEM NO

THIS DRAWING IS A CONTROLLED DOCUMENT.

DIMENSIONS: mm [IN]

TOLERANCES UNLESS OTHERWISE SPECIFIED:
0 PLC ±-
1 PLC ±-
2 PLC ±-
3 PLC ±-
4 PLC ±-
ANGLES ±-

MATERIAL - -
FINISH - -

DWN R.O.WILSON 15MAR2011
CHK K.J.STAKEM 17MAR2011
APVD T.L.ELBIN 17MAR2011
PRODUCT SPEC -
APPLICATION SPEC See Table
WEIGHT -

TE Connectivity

NAME FINE ADJUST SIDE FEED HDI APPLICATOR -

SIZE	CAGE CODE	DRAWING NO	RESTRICTED TO
A1	00779	C-1530503	-

CUSTOMER ACCESSIBLE PRODUCTION DRAWING SCALE 3:5 SHEET 1 OF 1 REV A1

VIEW B ROTATED 180°

POST-FEED 40mm STROKE	POST-FEED 30mm STROKE	PRE-FEED 30mm STROKE	PRE-FEED 40mm STROKE

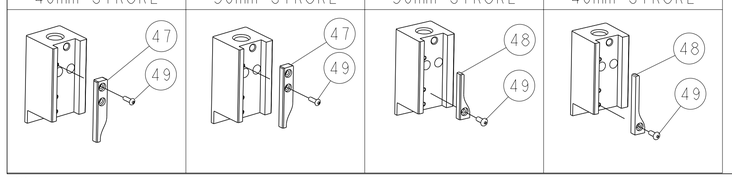

4805 (3/11)

Pro/ENGINEER DRAWING