Copyright FCI.

FCIconnect.com

PRODUCT NUMBER	PITCH
VKxx71x000J0G	5.00 mm

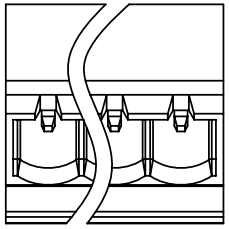

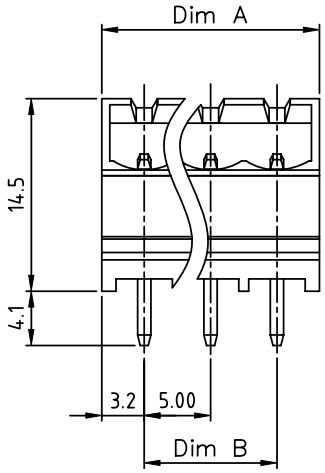

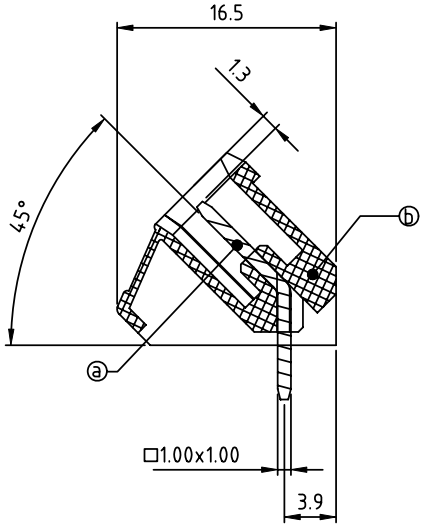

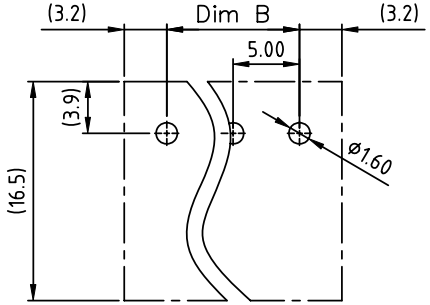

RECOMMENDED P.C.B LAYOUT
TOP VIEW

Material:
- Item ⓐ Male contact pin:Copper Tin plated
- Item ⓑ Terminal (housing): Thermoplastic (UL94V-0)

Electrical:	cULus /VDE/TUV
Voltage rating:	300V/300V/300V
Current rating:	15A/17A/20A
Withstanding Voltage:	1.6 KV/2.5KV/2.5KV
Operating temperature:	-40°C to +115°C
Soldering temperature:	260°C±5°C/5 Sec
Safety Approval:	

PART NO.: VK xx 71 x 0 00J0 G

N = Number of poles
Dim A=(N-1)x5.0+6.4
Dim B=(N-1)x5.0

Poles	Tolerance
2-6p	±0.15
7-12p	±0.20
13-18p	±0.30
19-24p	±0.40

Solid block
No. of poles
02 2 poles
03 3 poles
... ...
24 24 poles

Color
0 Black (RAL9005)
2 Red (RAL3001/D)
3 Orange(RAL2011/P)
4 Yellow(RAL1018/A)
5 Green(RAL6018/T)
6 Blue (RAL5015/A)
8 Grey(RAL7035/D)
9 White(RAL1102)
C Green(RAL6018/U)

RoHS compliant
(lead<4%)
In copper Alloy

mat'l. code				surface ASME Y14.5	tolerance ASME Y14.5	projection	product family TERMINAL BLOCK
ltr	ecn no	dr	date	tolerances unless otherwise specified			title TERMINAL BLOCK
				angles	linear X.±0.5 / X.X±0.3 / X.XX±0.1	MM	PLUGGABLE SOCKET,CLOSE, 45DEGREE,WITHOUT FLANGE
				X°±1°		scale	
				dr	EVIN ZHONG 042214	FCI	dwg no VKxx71x000J0G sheet 1 of 1 size A4
				engr	EVIN ZHONG 042214		
				chr	HANKE FENG 042214		
				appd	SHI JUN 042214		type CUSTOMER Drawing
sheet index	revision A	sheet 1					