NOTES:
1. MOUNTING: Mounts in a ∅.250±.002 [∅6.35mm±.05] panel hole on .375 [9.5mm] centers. Panel thickness .031 [.8 mm] to .125 [3.18mm]. Panel hole should be deburred, but not chamfered.
2. ASSEMBLY: Insert clip mount through panel hole, insert LED into clip mount, slide spacer over clip mount.
3. U.S. & Foreign Pat. Issued & Pend.

REVISIONS				
ECN#	REV.	DESCRIPTION	DATE	INITIALS
	001	REVISED PER ECR111009AZ01	6-20-10	SMU

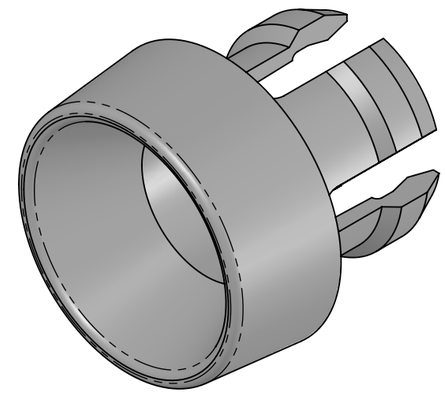

SPACER
(ORDER SEPARATELY)

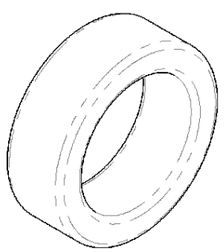

SPC 125

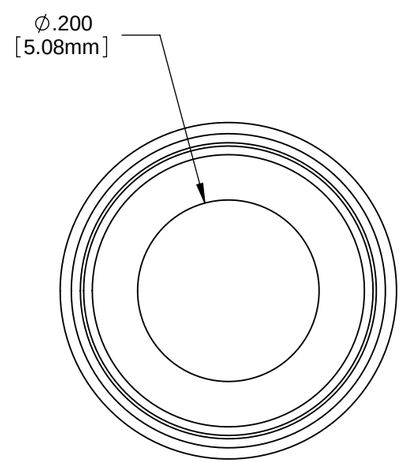

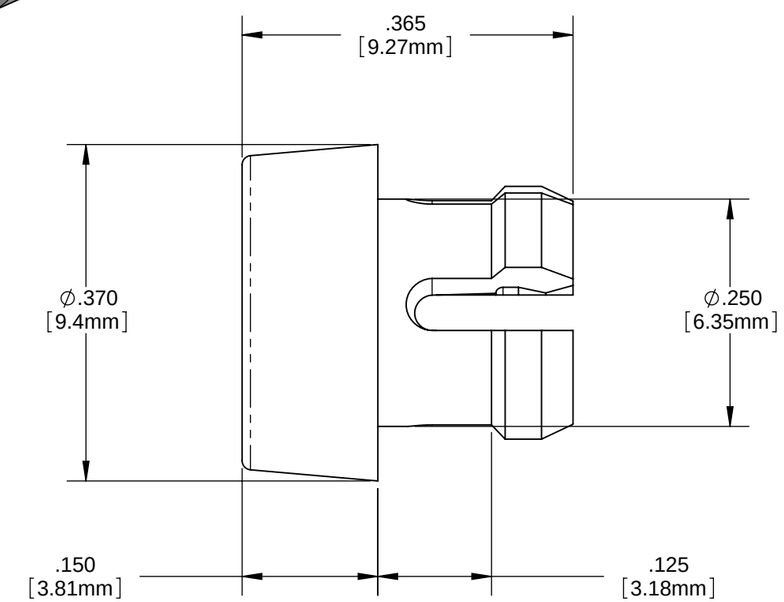

ORDERING CODE : **CLP 129 BLK**

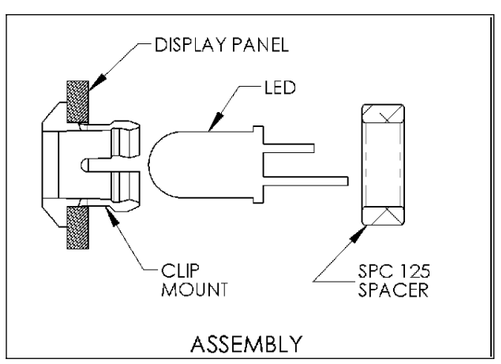

UNLESS OTHERWISE SPECIFIED DIMENSIONS ARE IN INCHES:
ANGLES ±1°
FINISH
DECIMALS .X ±.020 .XX ±.010 .XXX ±.005
BREAK ALL CORNERS AND SHARP EDGES .030 MAX

THIRD ANGLE PROJECTION

PROPRIETARY AND CONFIDENTIAL
THE INFORMATION CONTAINED IN THIS DRAWING IS THE SOLE PROPERTY OF VISUAL COMMUNICATIONS COMPANY, INC. ANY REPRODUCTION IN PART OR AS A WHOLE WITHOUT THE WRITTEN PERMISSION OF VISUAL COMMUNICATIONS COMPANY, INC IS PROHIBITED.

MATERIAL
POLYCARBONATE , UL 94-V2, BLACK

FINISH

APPROVAL		DATE
DRAWN:	SMU	6-20-10
CHECKED:	DZ	6-20-10

DO NOT SCALE DRAWING

VISUAL COMMUNICATIONS COMPANY, INC.
190 Bosstick Boulevard, Suite101 San Marcos, CA 92069 USA
Phone (760) 560-1300 Fax (760) 560-1301 email vccsales@vcclite.com

TITLE:
CLIPLITE® CLP 129 MOUNT

SIZE	DWG. NO.	REV
B	CLP 129 BLK	001

SCALE: 1:1 SHEET 1 OF 1