REV.	DESCRIPTION	DATE	DESIGNED
1			

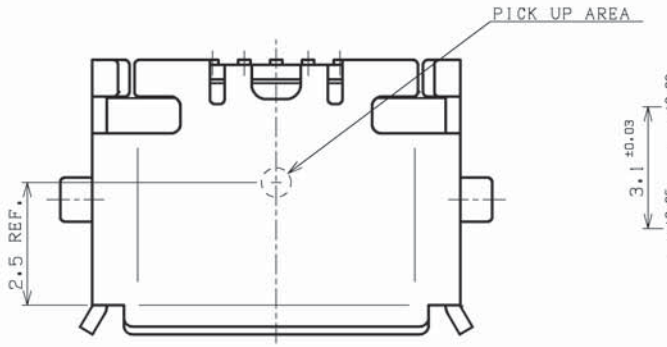

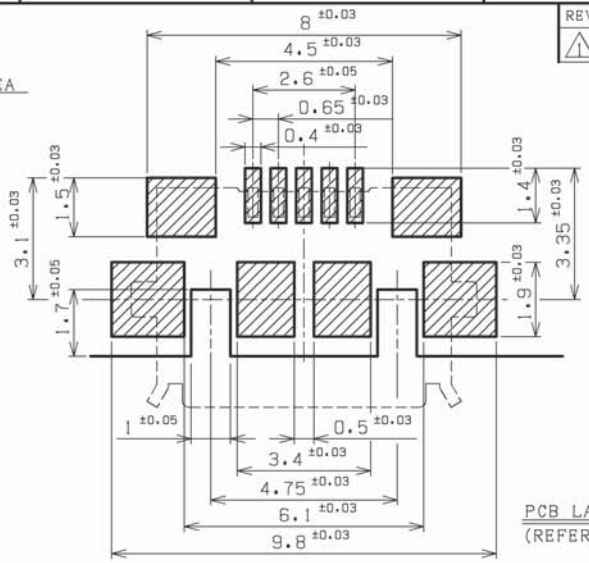

NOTE 1:UNLESS OTHERWISE SPECIFIED TOLERANCE: ±0.3
2:SURFACE FINISH OF CONTACT :
OVER ALL :NICKEL UNDER PLATED
CONTACT POINTS:GOLD PLATED
SOLDER TAILS :GOLD PLATED
3:SURFACE FINISH OF SHELL
OVER ALL :NICKEL UNDER PLATED
TIN PLATED

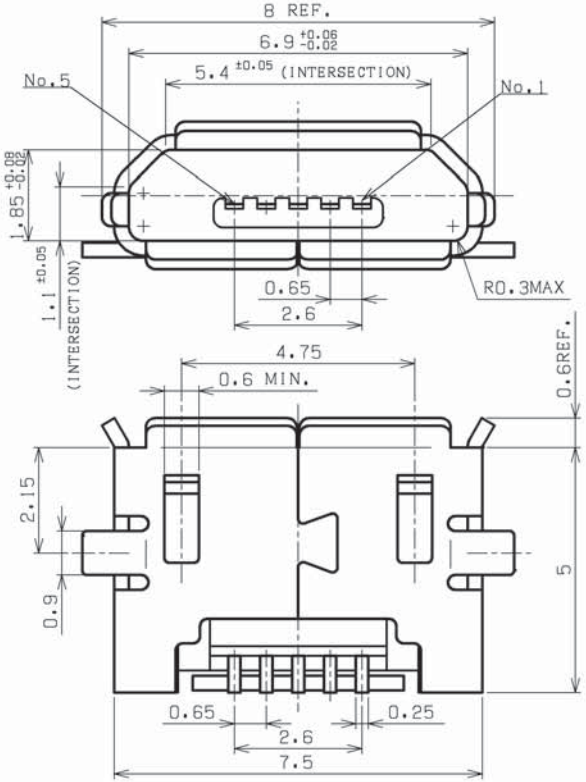

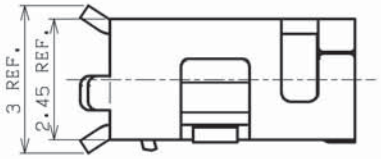

PCB LAYOUT
(REFERENCE)

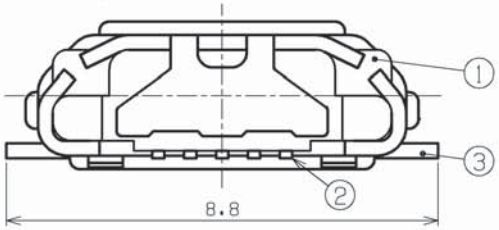

No.	PART NAME	MATERIAL	SURFACE FINISH	REMARKS
3	SHELL	STAINLESS STEEL	NOTE 3	t=0.3
2	CONTACT	COPPER ALLOY	NOTE 2	
1	HOUSING	HEAT RESISTING RESIN	BLACK	UL94V-0

SIZE	UNIT	SCALE	PROJECTION	DATE
A3	METRIC	10:1		16.FEB.2009

APPROVED	CHECKED	DESIGNED	DRAWN
S.U		Y.N	Y.N

CUSTOMER

SERIES NAME	MicroUSB Receptacle Btype Reverse
PART No.	UB-MC5BR3-RS04-4S NMP
DRAWING No.	CT7-00350-240-2 R0

JST J.S.T.MFG.CO, .LTD

THIS DRAWING CONTAINS INFORMATION THAT IS PROPRIETARY TO J.S.T.
AND SHOULD NOT BE USED WITHOUT WRITTEN PERMISSION.

EC4109-2

REV.	DESCRIPTION	DATE	DESIGNED
1			

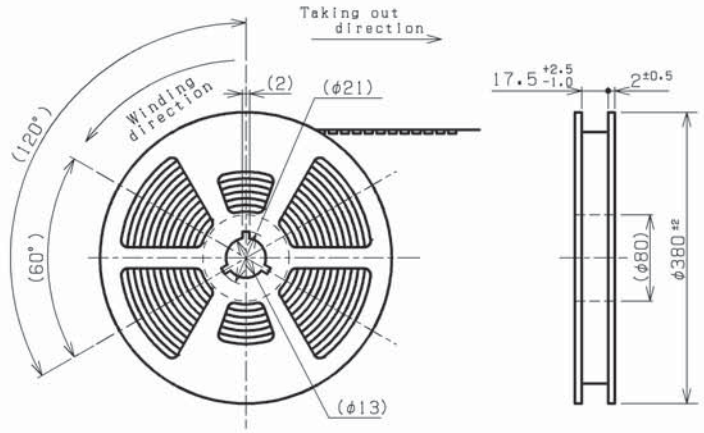

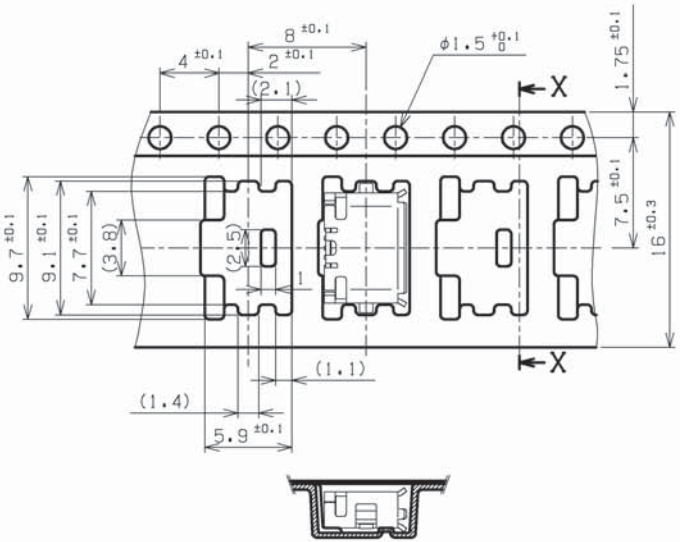

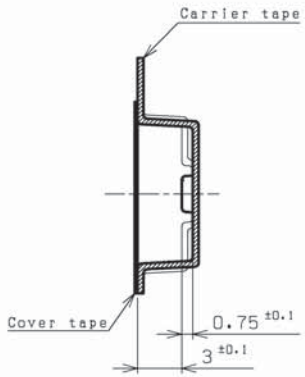

X-Xsec.

NOTE

1) Connector part:See the DWG.
2) Quantity to be packaged:3000pcs/reel.
3) Leading tape length.

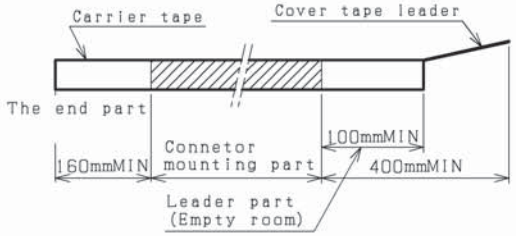

4) Cover tape peel strength:0.1~1N
Peeling speed:300mm/min.

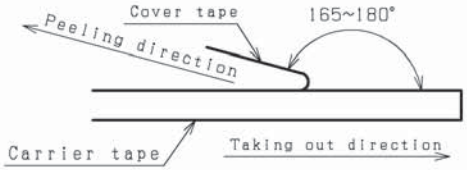

5) Material
:Carrier tape:Polyster(PET)
:Cover tape :Polester(PET)
:Reel :Flange. Polystyrene(PS)
:Core. Polypropylene(PP)
:Core. Polystyrene(PS)

6) Unless otherwise spscified tolerance are ±0.3.

SIZE	UNIT	SCALE	PROJECTION	DATE	CUSTOMER	
A3	METRIC	FREE		22.JUL.2008		
APPROVED	CHECKED	DESIGNED	DRAWN		SERIES NAME	MicroUSB Receptacle Reverse Btype
S.U		Y.N	Y.N		PART No.	UB-MC5BR3-RS04-4S-TB
JST J.S.T.MFG.CO, .LTD					DRAWING No.	CT7-00350-G40-1 RO

THIS DRAWING CONTAINS INFORMATION THAT IS PROPRIETARY TO J.S.T.
AND SHOULD NOT BE USED WITHOUT WRITTEN PERMISSION.

EC4109-2