THIS DRAWING IS UNPUBLISHED. RELEASED FOR PUBLICATION - ,- .
© COPYRIGHT - By - ALL RIGHTS RESERVED.

LOC	DIST
CM	00

REVISIONS

P	LTR	DESCRIPTION	DATE	DWN	APVD
	J2	REVISED PER ECO-11-004917	11MAR11	RK	HMR

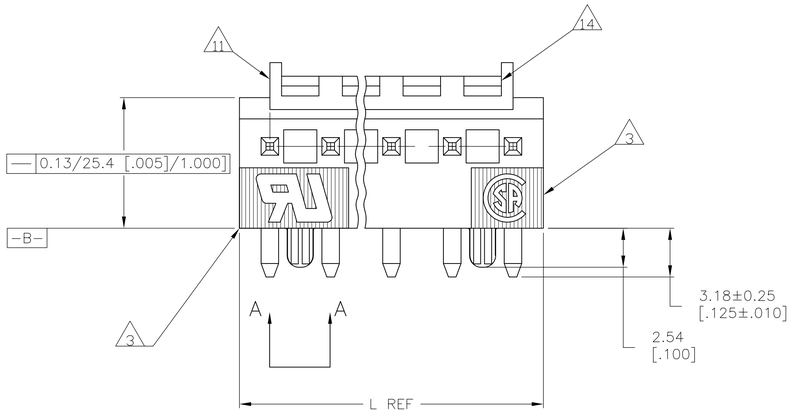

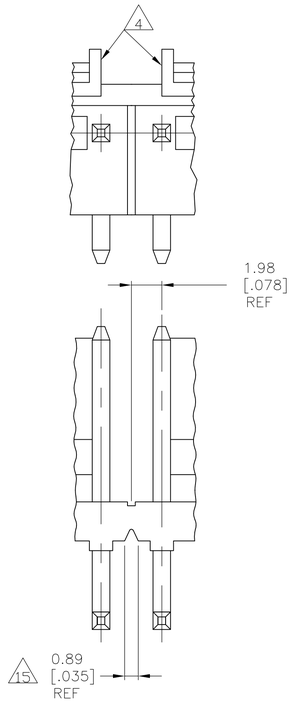

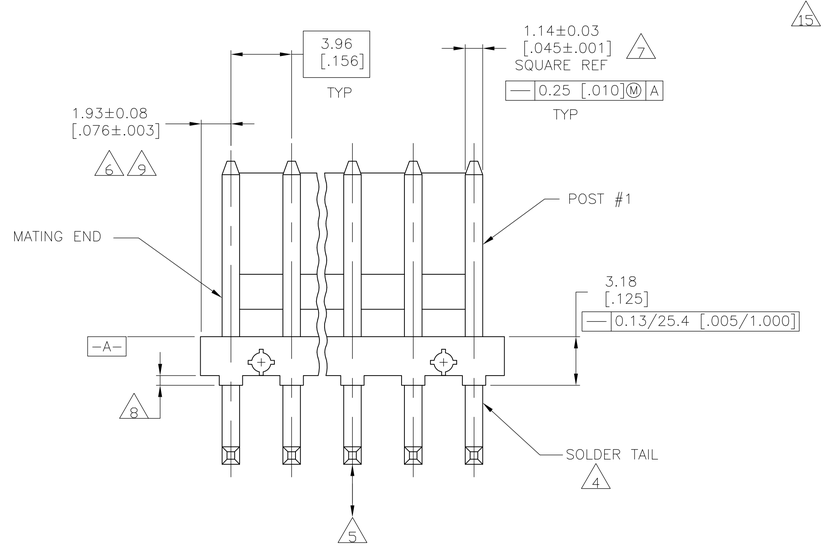

INTERRUPED WALL
FOR POSITION SIZES
6 AND ABOVE
13

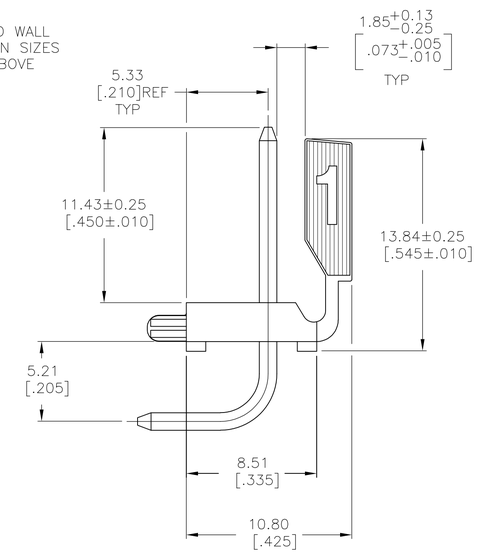

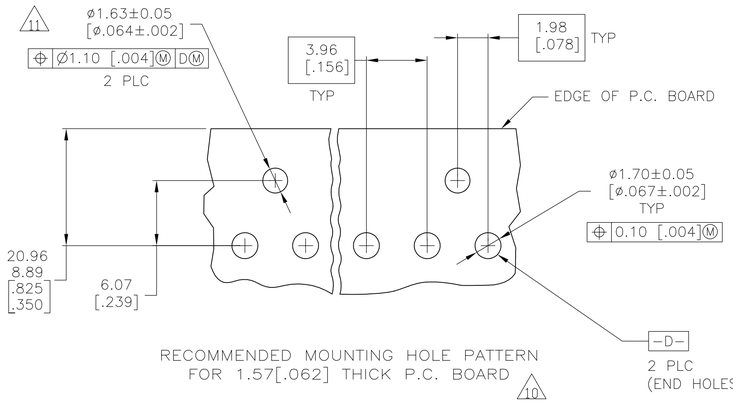

RECOMMENDED MOUNTING HOLE PATTERN
FOR 1.57[.062] THICK P.C. BOARD 10

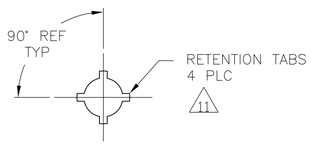

VIEW A–A
SCALE 10:1

1. MATERIAL
   HOUSING: THERMOPLASTIC POLYESTER,GLASS FILLED,UL94V-0.
   POST: COPPER ALLOY
2. FINISH
   HOUSING: NATURAL
   POST: BRIGHT TIN-LEAD (93/7) PLATE,0.00380-0.00880[.000150-.000350] THK OVER NICKEL UNDERPLATE,0.00130[.000050] MIN THK.
3. UL MARKING MAY NOT APPEAR ON THE 2 OR 3 POSITION SIZES. CSA MARKING MAY NOT APPEAR ON THE 2 POSITION SIZE.
4. POST SOLDERTAILS COMPLY WITH AMP SOLDERABILITY SPEC 109-11-2.
5. POST WITHSTANDS 13.34N [3 LB] MIN AXIAL FORCE IN EITHER DIRECTION WITHOUT DISLODGING.
6. APPLIES AT -A- .
7. APPLIES WHEN THE HEADER IS STRAIGHT.
8. PLASTIC PROJECTIONS PERMITTED IN THIS ZONE.
9. COORDINATE DIMENSIONS APPLIES FROM THE CENTER OF THE ACTUAL FEATURE.
10. SOLDER SIDE OF BOARD IS SHOWN.
11. THE RENTENTION TABS PROVIDE A ONE-TIME INTERFERENCE FIT IN THE 1.63[.064] DIAMETER BOARD HOLE FOR HEADER ASSEMBLY RETENTION DURING SOLDERING. FOUR TABS PER PEG,TWO PEGS PER HEADER ASSEMBLY (ONE PEG ONLY FOR 2 POSITION SIZE).
12. DIMENSIONS IN BRACKETS ARE IN INCHES.
13. ALL POSITION SIZES HAVE THE BACKWALL NOTCHED ON BOTH ENDS AS SHOWN. THE 2 THRU 5 POSITION SIZES HAVE SOLID BACKWALLS. POSITION SIZES 6 AND ABOVE HAVE AN INTERRUPTED BACKWALL AT VARIOUS LOCATIONS (SEE TABLE FOR INTERRUPTION(S) LOCATIONS).
14. EDGE OF POLARIZING LOCK WALL TO BE IN LINE WITH CENTERLINE OF ADJACENT POST WITHIN ±0.13 [.005]
15. NOTCH SHOWN MAY OR MAY NOT APPEAR.
16. FINISH
    HOUSING: NATURAL
    POST: MATTE TIN PLATE, .000150" MIN THICK OVER NICKEL.
17. OBSOLETE PART NUMBER

	FINISH	BACKWALL INTERRUPTION(S) BETWEEN POST	L	NO. OF POSITIONS	PART NO.
	16	4&5, 7&8, 11&12, 14&15	71.20 [2.803]	18	4-644617-8
		4&5, 7&8, 10&11, 13&14	67.23 [2.647]	17	4-644617-7
		4&5, 8&9, 12&13	63.27 [2.491]	16	4-644617-6
		4&5, 8&9, 11&12	59.31 [2.335]	15	4-644617-5
		4&5 7&8, 10&11	55.35 [2.179]	14	4-644617-4
		4&5 7&8, 10&11	51.38 [2.023]	13	4-644617-3
		4&5, 8&9	47.42 [1.867]	12	4-644617-2
		4&5, 7&8	43.46 [1.711]	11	4-644617-1
		3&4, 7&8	39.50 [1.555]	10	4-644617-0
		3&4, 6&7	35.53 [1.399]	9	3-644617-9
		4&5	31.57 [1.243]	8	3-644617-8
		4&5	27.61 [1.087]	7	3-644617-7
		3&4	23.65 [.931]	6	3-644617-6
		NONE	19.69 [.775]	5	3-644617-5
		NONE	15.72 [.619]	4	3-644617-4
		NONE	11.76 [.463]	3	3-644617-3
	16	NONE	7.80 [.307]	2	3-644617-2
17	2	4&5, 7&8, 11&12, 14&15	71.20 [2.803]	18	1-644617-8
17 17		4&5, 7&8, 10&11, 13&14	67.23 [2.647]	17	1-644617-7
17		4&5, 8&9, 12&13	63.27 [2.491]	16	1-644617-6
17 17		4&5, 8&9, 11&12	59.31 [2.335]	15	1-644617-5
17		4&5 7&8, 10&11	55.35 [2.179]	14	1-644617-4
17 17		4&5 7&8, 10&11	51.38 [2.023]	13	1-644617-3
17		4&5, 8&9	47.42 [1.867]	12	1-644617-2
17 17		4&5, 7&8	43.46 [1.711]	11	1-644617-1
17		3&4, 7&8	39.50 [1.555]	10	1-644617-0
17 17		3&4, 6&7	35.53 [1.399]	9	644617-9
17		4&5	31.57 [1.243]	8	644617-8
17 17		4&5	27.61 [1.087]	7	644617-7
17		3&4	23.65 [.931]	6	644617-6
17 17		NONE	19.69 [.775]	5	644617-5
17		NONE	15.72 [.619]	4	644617-4
17 17		NONE	11.76 [.463]	3	644617-3
17	2	NONE	7.80 [.307]	2	644617-2

THIS DRAWING IS A CONTROLLED DOCUMENT.

DIMENSIONS: mm [INCHES]

TOLERANCES UNLESS OTHERWISE SPECIFIED:
0 PLC ± -
1 PLC ± -
2 PLC ± -
3 PLC ± -
4 PLC ± -
ANGLES ± -

MATERIAL 1
FINISH 2 16

DWN B. LEWIS 26 OCT 93
CHK R. SWING 26 OCT 93
APVD D. CLARK 03 NOV 93
PRODUCT SPEC —
APPLICATION SPEC —
WEIGHT —

TE Connectivity

NAME MTA-156 HEADER ASSEMBLY, POLARIZED LOCK, RIGHT ANGLE FRONT BEND, .045 SQUARE POST, TIN-LEAD PLATED, WITH RETENTION PEGS

SIZE	CAGE CODE	DRAWING NO	RESTRICTED TO
A1	00779	C-644617	—

CUSTOMER DRAWING | SCALE 5:1 | SHEET 1 OF 1 | REV J2

METRIC

4805 (3/11)