DRAWING MADE IN THIRD ANGLE PROJECTION

680834 680834

PART NUMBER	REV	FIRST USED	
680834–1	H	122500–1	T–UNIT
680834–2	H	680017–4	K–UNIT
680834–3	H	354500–1	G–UNIT

1. RECOMMENDED SPARE PARTS
2. ITEMS NOT SHOWN
3. TOL ±.25
4. TO RUN THIS APPLICATOR ON THE AMPOMATOR SEE DOC. PACKAGE ITEM 146.
5. USE SEALANT PN 1–23419–5 AS SHOWN
6. CANNOT RUN 2 WIRES ON LEADMAKER.
7. SPRING LOADED TONKER (P/N 354853–1) MUST BE USED WHEN RUNNING THE APPLICATOR ON A LEADMAKER.

CRIMPING DATA				THIS APPLICATOR WILL APPLY
PAD LETTER	CRIMP HEIGHT	WIRE SIZE	STRIP LENGTH	TERMINAL P/N
A	.073	#14	.231–.234	521217
7 B	.068	2 #18	.231–.234	521451
C	.064	#16	.231–.234	521747
D	.058	#18/(2)#20	.231–.234	
CRIMP	SIZE TYPE	FEED		
WIRE	.110 F	.770		
INS.	.210 F			
INSULATION RANGE	WIRE RANGE	TERM APPL SPEC 114–2124		
.130–.180	18–14	AI SHEET 8095 & 8098		

–3	–2	–1	U/M	DWG SIZE	PART NO	DESCRIPTION	ITEM NO
							181
							180
							179
							178
							177
							176
1	1	1	–	A	986950–1	WASHER, FLAT PRECISION	175
2	2	2	–	C	2–354779–6	PIN, WIRE DISC (.3120)D	174
2	2	2	–	C	1–354779–1	PIN, WIRE DISC (3045)C	173
2	2	2	–	C	354779–3	PIN, WIRE DISC (.3005)B	172
2	2	2	–	C	9–354778–1	PIN, WIRE DISC (.2950)A	171
							170
2	2	2	–	A	21026–4	WASHER, STAR	169
							168
							167
							166
							165
							164
							163
							162
							161
							160
							159
							158
							157
							156
							155
							154
							153
							152
							151
							150
							149
							148
							147
							146
							145
							144
							143
							142
							141

REVISION OF EACH ASSY NO (WHEN BLANK, USE DWG REVISION)

QTY REQD PER ASSY — PARTS LIST

–3	–2	–1	U/M	DWG SIZE	PART NO	DESCRIPTION	ITEM NO
1	1	1	–	A	23030–1	SCR,SOC HD CAP 6–32 X .25 LG	140
1	1	1	–	B	690212–1	POST,RAM	139
1	1	1	–	A	22480–5	WASHER, SPRING	138
1	1	1	–	C	354777–1	DISC,WIRE	137
1	1	1	–	C	690142–1	DISC, INSULATION	136
1	1	1	–	A	690124–9	WASHER,RAM	135
1	1	1	–	A	690125–1	WASHER,LAMINATED	134
1	1	1	–	A	21009–2	SCR.,SOC SET 1/4–20 X .25 LG	133
1	1	1	–	A	690191–1	PLUG,NYLON	132
1	1	1	–	A	461690–1	SPACER	131
							130
2 –	1	–	–	C	692655–1	VALVE ASSY	129
4	4	4	–	A	2–21002–9	SCR. BUT HD 10–32 X .75	128
2	2	2	–	A	3–21000–7	SCR. SOC HD 10–32 X .75	127
1	1	1	–	B	852224–2	FINGER,FEED	126
1	1	1	–	B	461062–6	FEED FINGER ASSY	125
1	1	1	–	B	3–21001–4	SCREW, SOC HD CP 3/8–16 X .88 LG	124
1	1	1	–	C	852289–1	AIR FEED ASSY	123
1	1	1	–	A	21024–8	WASHER, LOCK, .38	122
							121
2	2	2	–	A	1–23030–2	SCR,SOC.HD.8–32X.75 LOK–WEL	120
							119
1	1	1	–	C	852253–2	BLADE,SLUG	118
							117
							116
							115
							114
							113
							112
							111
							110
							109
							108
							107
							106
							105
							104
							103
1	1	1	–	C	455888–8	SPACER,CRIMPER	102
2	2	2	–	A	3–21000–5	SCR. SOC HD 10–32 X .50	101
1	1	1	–	B	454220–1	CAP, RAM	100
1	1	1	–	C	3–456408–3	CRIMPER, WIRE	99
1	1	1	–	C	6–456134–7	CRIMPER,INS "F"	98
1	1	1	–	A	238009–1	BLOCK, CRIMPER SPACER	97
1	1	1	–	C	1–455888–6	SPACER,CRIMPER	96
1	1	1	–	A	7–21002–7	SCR.,BUT. HD.5/16 UNF–24 X .75	95
–	–	–	–	D	354385–3	PNEUMATIC ASSY	94
1	1	1	–	A	1–22183–7	PIN, GROOVE TYP 67 .125 DIA X .63	93
1	1	1	–	A	2–22286–2	SPRING, EXT. LE–031B–2	92
1	1	1	–	A	1–21919–1	PIN,DOWEL .094 DIA X .375	91
1	1	1	–	A	852281–2	ROLLER	90
1	1	1	–	D	354385–2	PNEUMATIC ASSY	89
1	1	1	–	B	852287–1	PLATE, RETAINER	88
1	1	1	–	B	852286–1	LATCH, INSERT	87
2	2	2	–	A	852521–1	PIN, DOWEL MOD. .094 DIA X .49	86
1	1	1	–	B	852284–1	ARM, LATCH	85
1	1	1	–	A	1–21030–7	PIN, DOWEL .188 DIA X 1.50	84
							83
							82
							81
2	2	2	–	A	980282–3	CONNECTOR,MALE 1/8NPTX.25	80
							79
3	2	3	–	A	980285–2	ELBOW,MALE,SWIVEL 1/8 X .25T	78
							77
							76
							75
1	1	1	–	B	852247–1	SLIDE,STRIPPER	74
1	1	1	–	A	4–22279–9	SPRING, COMP. LC–026B–9	73
							72
5	5	5	–	A	22733–3	SCR,BUT HD CP 6–32 X .25 LOK–WEL	71

REVISION OF EACH ASSY NO (WHEN BLANK, USE DWG REVISION)

QTY REQD PER ASSY — PARTS LIST

–3	–2	–1	U/M	DWG SIZE	PART NO	DESCRIPTION	ITEM NO
1	1	1	–	A	852248–1	STRIPPER	70
1	1	1	–	B	852245–2	CAM, INSERT	69
							68
1	1	1	–	B	852246–1	CAM,VALVE	67
							66
1	1	1	–	D	856287–1	RAM	65
							64
1	–	1	–	A	22374–7	EXHAUST QUICK	63
1	–	1	–	A	22304–1	NIPPLE, HEX 1/8 NPT	62
1	1	1	–	A	1–23619–6	PIN,GROOVED .188 DIA	61
1	1	1	–	A	852298–1	LINK	60
4	4	4	–	A	21045–3	CRESCENT RING	59
1	1	1	–	A	4–23619–0	PIN,GROOVED, .188 DIA	58
1	1	1	–	B	852296–1	CLEVIS	57
							56
5	5	5	–	A	6–21002–1	SCR,BHC (10–24X.25)AIR CYL	55
							54
1	1	1	–	B	852323–2	MOUNT,AIR CYL.	53
1	1	1	–	B	852297–1	ARM,PIVOT	52
1	1	1	–	C	856265–2	ANVIL	51
1	1	1	–	A	985314–1	AIR CYL., 3/4 BORE X 7/16 ST.	50
1	1	1	–	C	852295–1	ROD,BACKUP	49
							48
1	1	1	–	A	21021–4	NUT,FLEXLOC 10–32	47
1	1	1	–	C	1–852294–0	BACKUP, TERMINAL .160	46
1	1	1	–	C	1–852294–1	BACKUP, TERMINAL .140	45
3	3	3	–	A	21899–2	WASHER, FLAT	44
1	1	1	–	C	1–852294–2	BACKUP, TERMINAL .120	43
							42
1	1	1	–	C	1–852294–3	BACKUP, TERMINAL .187	41
1	1	1	–	C	852250–5	GUIDE,FRONT STRIP	40
2	2	2	–	A	22354–6	STUD,8–32	39
1	1	1	–	B	852251–3	DRAG	38
2	2	2	–	A	2–22280–5	SPRING, COMP. LC–032C–6	37
2	2	2	–	A	21022–2	NUT,FLEXLOC 8–32	36
1	1	1	–	B	90594–1	GUIDE, REAR STRIP	35
4	4	4	–	A	1–21899–3	WASHER FLAT #8	34
							33
1	1	1	–	B	90591–2	SHEAR, LEFT	32
							31
1	1	1	–	B	853981–2	SHEAR, RIGHT	30
							29
4	4	4	–	A	2–21002–2	SCR., BUT.HD. 8–32X.50	28
1	1	1	–	D	856231–2	PLATE, STRIP GUIDE	27
							26
							25
							24
							23
							22
3	4	3	–	A	23030–2	SCR. SOC.HD. 6–32X.38 LOK–WEL	21
							20
							19
							18
13	13	13	–	A	2–21002–1	SCR. BHC 8–32 x .38	17
							16
							15
							14
1	1	1	–	A	354993–1	AIR CYL 1 1/8 X .63	13
							12
1	1	1	–	A	5–21028–1	PIN, SPRING .125 DIA x .50	11
1	1	1	–	A	1–23470–7	SPRING, COMP. LC–035C–19	10
1	1	1	–	B	90777–1	GIB, HOUSING	9
1	1	1	–	D	318198–2	INSERTOR, POD	8
1	1	1	–	A	22733–8	SCR.,BUT.HD.8–32X.38	7
1	1	1	–	D	90775–2	HOUSING, INSERT SLIDE	6
							5
1	1	1	–	B	1338955–4	HOLDDOWN, FIXED	4
3	3	3	–	A	2–22733–8	SCR. BUT HD 1/4–20 X .62	3
1	1	1	–	D	314866–3	PLATE, BASE	2
1	1	1	–	D	852221–2	HOUSING, APPLICATOR	1

REVISION OF EACH ASSY NO (WHEN BLANK, USE DWG REVISION)

QTY REQD PER ASSY — PARTS LIST

P	F	LTR	REVISION RECORD	APP	DATE
		H2	ECR–10–003910	S.X	23FEB2010
		H1	ECR–06–004495	GB	2–06
		H	ECN 0150–0176–05	TE	3–05
		G1	ECN 0150–0695–04	TE	5–04
		G	ECN 0150–0173–04	TE	2–04
		F	ECN 0150–1205–03	TE	11–03
		E	0150–0225–03	BH	MAR03
		D	ECN 0150–0069–03	CMR	JAN03

DIMENSIONS IN INCHES. DO NOT SCALE PRINT.
TOLERANCES UNLESS OTHERWISE SPECIFIED:
2 PLC DEC ±.02
3 PLC DEC ±.005
4 PLC DEC ±.0005
ANGLES ± 0° 30'
SURF TEXTURE: 125
REMOVE BURRS, BREAK SHARP EDGES .015 R MAX

MATL – HT TR – FIN –

DR C.ERISMAN 22JUN99 APP T.ELBIN 22JUN99
CHK C.ERISMAN 22JUN99 REL – –

AMP INCORPORATED Harrisburg, Pa. 17105

NAME ULTRA–POD APPLICATOR .250 STRAIGHT
MACHINE REF MINI APPL
SCALE 1:1 D DWG NO 680834 SHEET 1 OF 2 REV H2

CAGE CODE 00779 CUSTOMER AND ASSEMBLY DRAWING RESTRICTED TO

LOC A 66

THIS DRAWING IS A CONTROLLED DOCUMENT.
THIS DRAWING IS UNPUBLISHED. © COPYRIGHT 19 BY AMP INCORPORATED. ALL RIGHTS RESERVED. RELEASED FOR PUBLICATION 19

AMP 1756 REV 3–89 Transcribed 20070409.214346 (YYMMDD.HHMMSS) from CompuDivision, Inc., Medusa Revision 12.2.5T

DRAWING MADE IN THIRD ANGLE PROJECTION

680834 680834

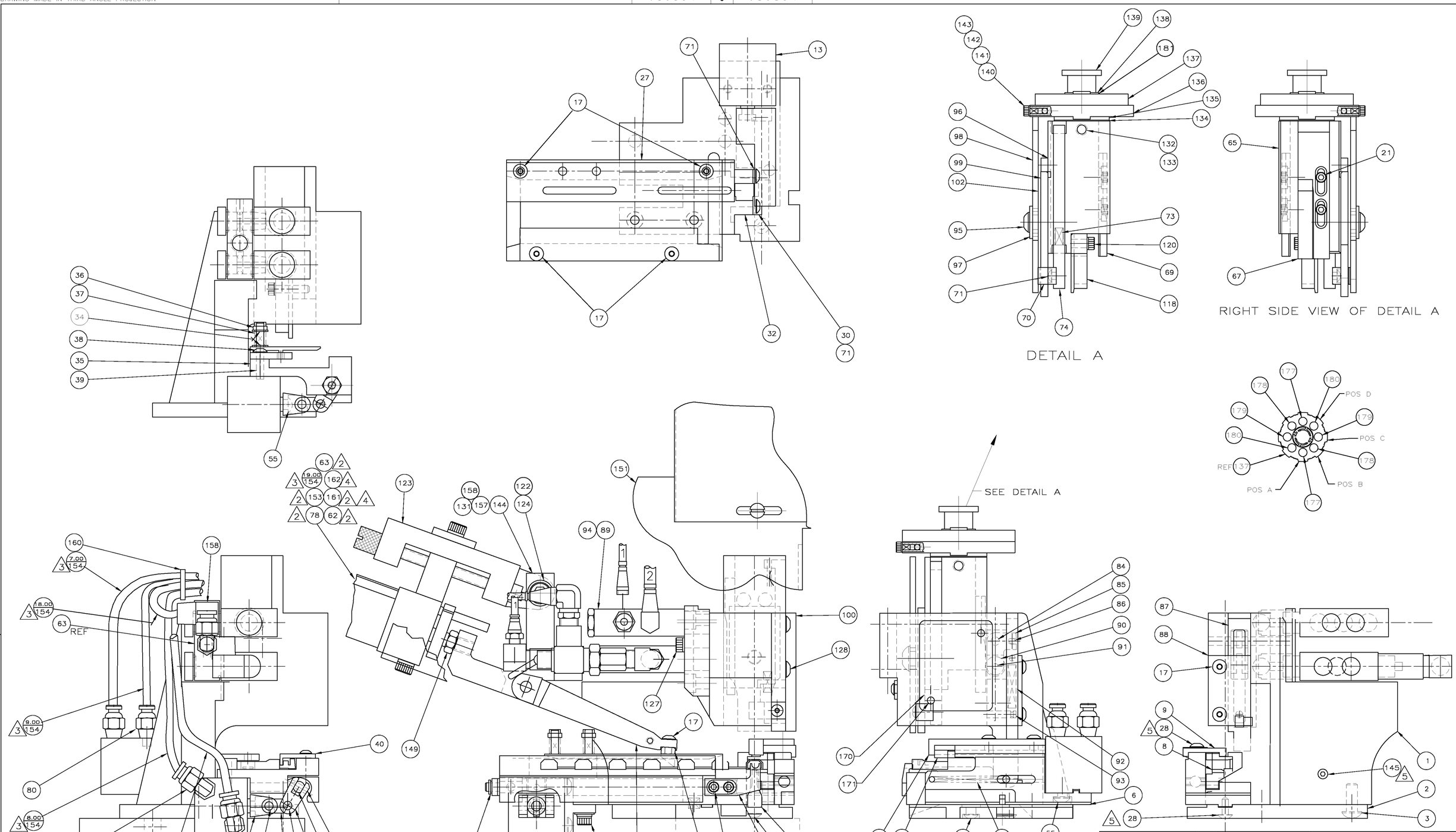

	DWG SIZE	PART NO	DESCRIPTION	ITEM NO
		REVISION OF EACH ASSY NO (WHEN BLANK, USE DWG REVISION)		
QTY REQD PER ASSY		PARTS LIST		

DIMENSIONS IN INCHES. TOLERANCES UNLESS OTHERWISE SPECIFIED:
2 PLC DEC ±
3 PLC DEC ±
4 PLC DEC ±
ANGLES ±
SURF TEXTURE: √
REMOVE BURRS, BREAK SHARP EDGES .015 R MAX

MATL	HT TR	FIN
–	–	–

DR	22JUN99	APP	22JUN99
C.ERISMAN		T.ELBIN	
CHK	22JUN99	REL	–
C. ERISMAN		–	

AMP INCORPORATED Harrisburg, Pa. 17105

NAME: ULTRA-POD APPLICATOR .250 STRAIGHT

MACHINE REF: MINI APPL

SCALE: 1:1 | D | DWG NO: 680834 | SHEET: 2 OF 2 | REV: H2

CAGE CODE: 00779

CUSTOMER AND ASSEMBLY DRAWING

RESTRICTED TO

SEE SHEET 1

P	F	LTR	REVISION RECORD	APP	DATE

LOC A

66

THIS DRAWING IS A CONTROLLED DOCUMENT.

THIS DRAWING IS UNPUBLISHED. © COPYRIGHT 19 BY AMP INCORPORATED. ALL RIGHTS RESERVED. RELEASED FOR PUBLICATION: .19

AMP 1756 REV 3-87 Transmit: 970409:214447 (YYMMDD:HHMMSS) from Computervision, Inc., Meduso Revision 12.2.5T