SHEET OF

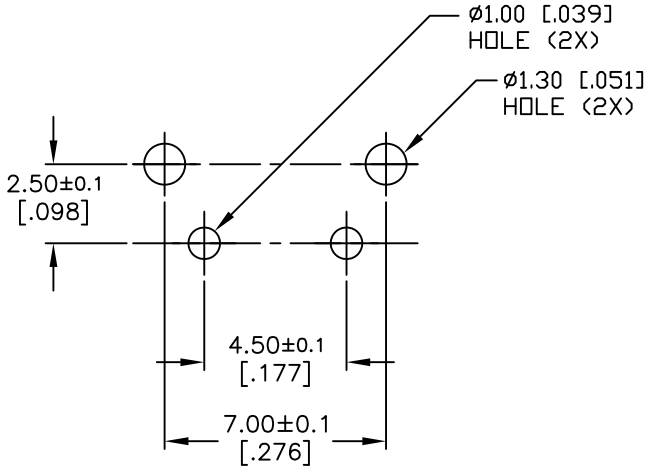

RECOMMENDED P.C.B. LAYOUT

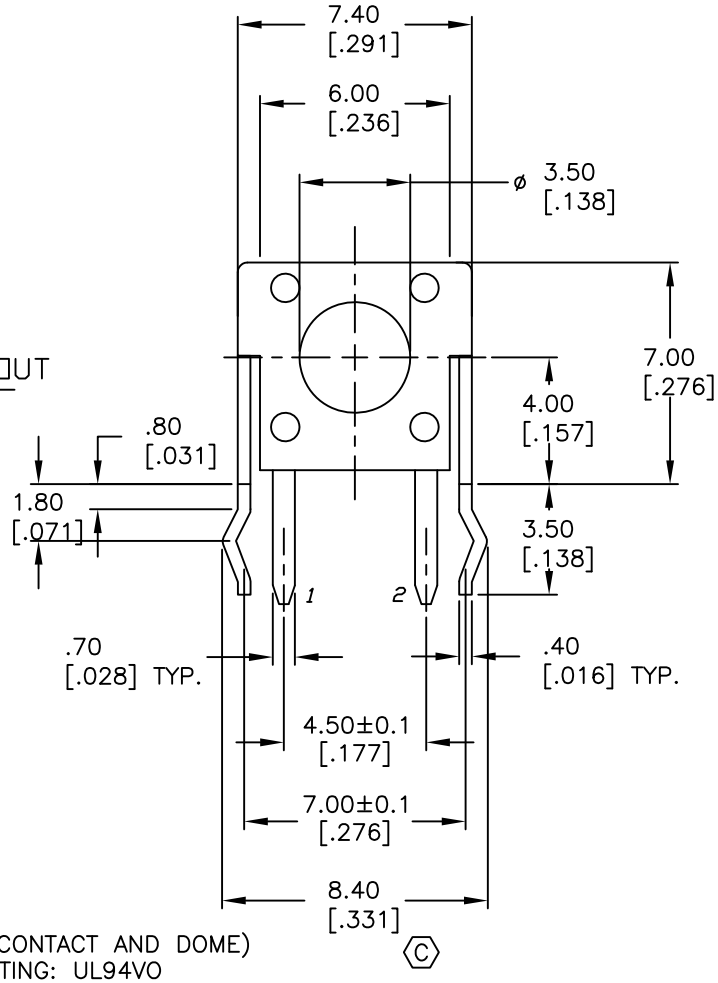

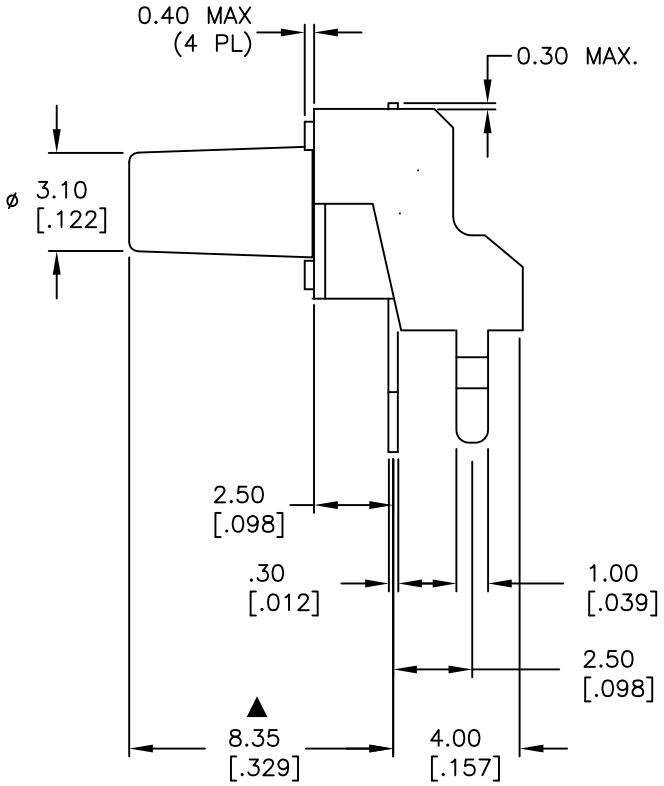

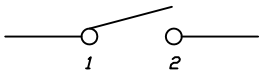

CIRCUIT: SPST

1. ALL DIMENSIONS IN MM [INCH]
2. GENERAL TOLERANCE: X.X=±0.4
   X.XX=±0.25
3. TERMINAL NO'S FOR REFERENCE
4. RATINGS: 50mA, 12VDC (SILVER CONTACT AND DOME)
5. ▲ HOUSING AND PLUNGER FLAME RATING: UL94VO
6. OPERATING FORCE: 160±50gf
7. TRAVEL: 0.25±0.1mm
8. CONTACT RESISTANCE: 100 mILLI–OHMS Max.
9. DIELECTRIC STRENGTH: 250V RMS min.
10. INSULATION RESISTANCE: 100 Mega OHMS min.
11. ELECTRICAL LIFE: 100,000 CYCLES min.
12. ▲ DESIGNATE CRITICAL PARAMETER:

REV.	ECN No.	DESCRIPTION	DATE	CHKD
C	19502	ADD TOLERANCE	12/08/10	BGL
B	12775	REVISED NOTE 3.	1/29/03	CB
A	12536	RELEASE FOR PRODUCTION	11/4/02	CB

THE INFORMATION CONTAINED IN THIS DOCUMENT IS PROPRIETARY TO E-SWITCH AND IS NOT TO BE COPIED OR TRANSFERRED

E-SWITCH®

TITLE: TL1105S F160 Q (Z-BRACKET) -UL94VO

SCALE	DATE	DR	DWG	REV
4:1	11/4/02	CB	P020309	C