MODEL NO.	PACKAGING
134-1000-015	ONE PCS PER BAG

REV	ECO	DATE
001	ECO-17-0032	11/28/2017

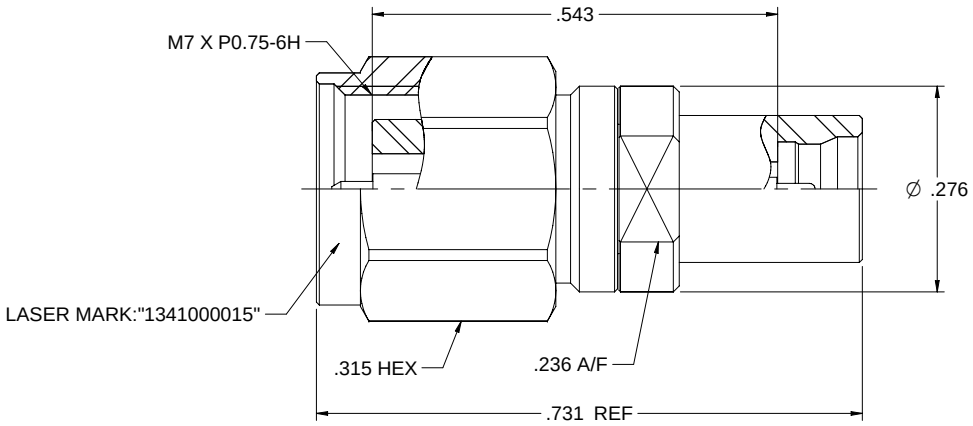

NOTES: UNLESS OTHERWISE SPECIFIED

1. MATERIAL & FINISH:
   1.1 BODY, CONTACT BODY & SHELL: PASSIVATED STAINLESS STEEL
   1.2 CONTACT PIN : GOLD PLATED BERYLLIUM COPPER
   1.3 INSULATOR: ULTEM 1000 AMBER
   1.4 C RING: BERYLLIUM COPPER
   1.5 GASKET: SILICONE RED

2. ELECTRICAL:
   2.1 IMPEDANCE: 50 OHMS
   2.2 FREQUENCY RANGE: 0-40 GHz
   2.3 RETURN LOSS: -20DB MAX
   2.4 CONTACT RESISTANCE: CENTER CONTACT: 6 MILLIOHMS MAX
   OUTERR CONTACT: 2.5 MILLIOHMS MAX
   2.5 INSULATION RESISTANCE: 5000 MOHM MIN

3. MECHANICAL:
   3.1 ENGAGEMENT / DISENGAGEMENT FORCE: 0.23 NM MAX (2.4MM)
   45 N MAX (SMP) / 9 N MAX (SMP)
   3.2 COUPLING PROOF TORQUE: 1.65 NM MIN
   3.3 COUPLING NUT RETENTION: 267 N MIN
   3.4 CONTACT RETENTION: 20 N MIN
   3.5 DURABILITY: 500 CYCLES MIN

4. ENVIRONMENT:
   4.1 THERMAL SHOCK: MIL-STD-202, METHOD 107, CONDITION B.
   4.2 OPERATING TEMPERATURE: -55 TO 125°C
   4.3 SALT SPRAY: MIL-STD-202, METHOD 101, CONDITION B
   4.4 SHOCK: MIL-STD-202, METHOD 213, CONDITION I
   4.5 VIBRATION: MIL-STD-202, METHOD 204, CONDITION D
   4.6 MOISTURE RESISTANCE: MIL-STD-202, METHOD 106

cinch connectivity solutions
This PROPRIETARY Document is property of Cinch Connectivity Solutions. Information, ideas, and designs contained herein are in confidence and in understanding that it is not copied or used without permission in writing.
INTERPRET DRAWING IN ACCORDANCE WITH ASME Y14.5-2009.

Model No. 134-1000-015			Johnson
RoHS2 2011/65/EU	Cage Code		Title: ADAPTER ASSEMBLY, 2.4mm PLUG TO SMP PLUG (LIMITED DETENT)
UNLESS OTHERWISE SPECIFIED UNITS: INCH	3RD ANGLE PROJECTION		Drawing No. 134-1000-015 / Rev. 001
.XXX ±.02 .XXXX ±.01 ANGLES ±5°	Drawn by: Betty.Yu		
	Date: 10/27/2017	Size C / DO NOT SCALE DRAWING	Workmanship Std. NONE / Sheet 1 of 1