LOADING PATTERN MATING SIDE

f	K	K	K	K	K	K	K	K	K	K	K	K	K	K	K	K	K	K	K	K	K	K	K	K	K
e	E	E	E	E	E	E	E	E	E	E	E	E	E	E	E	E	E	E	E	E	E	E	E	E	E
d	E	E	E	E	E	E	E	E	E	E	E	E	E	E	E	E	E	E	E	E	E	E	E	E	E
c	E	E	E	E	E	E	E	E	E	E	E	E	E	E	E	E	E	E	E	E	E	E	E	E	E
b	E	E	E	E	E	E	E	E	E	E	E	E	E	E	E	E	E	E	E	E	E	E	E	E	E
a	E	E	E	E	E	E	E	E	E	E	E	E	E	E	E	E	E	E	E	E	E	E	E	E	E
z	0	0	0	0	0	0	0	0	0	0	0	0	0	0	0	0	0	0	0	0	0	0	0	0	0
POS	01				05					10					15					20					25

LOADED CONNECTOR ASSEMBLY
(FOR EXAMPLE)

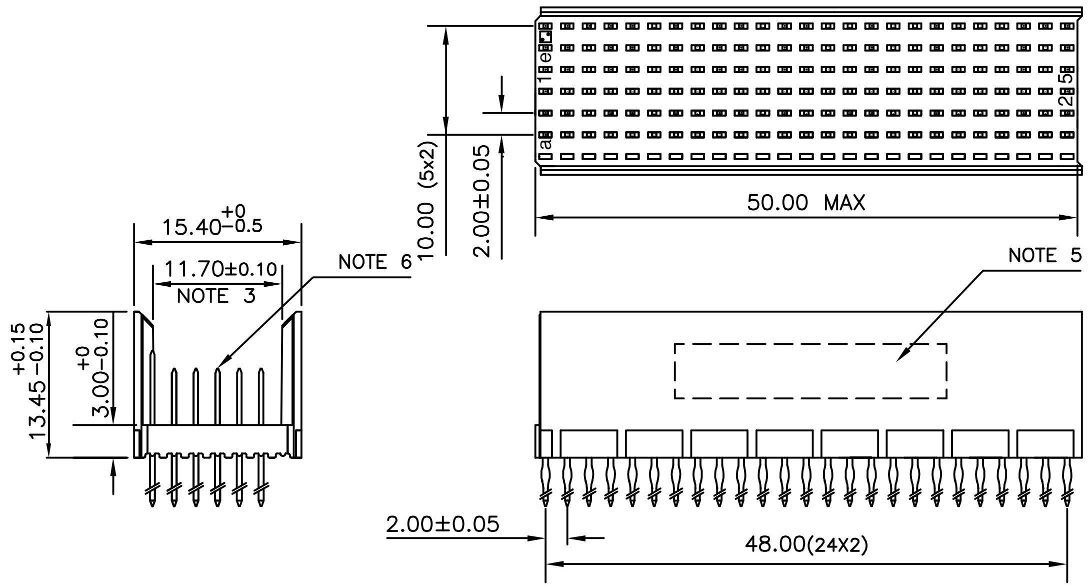

CONTACT OVERVIEW

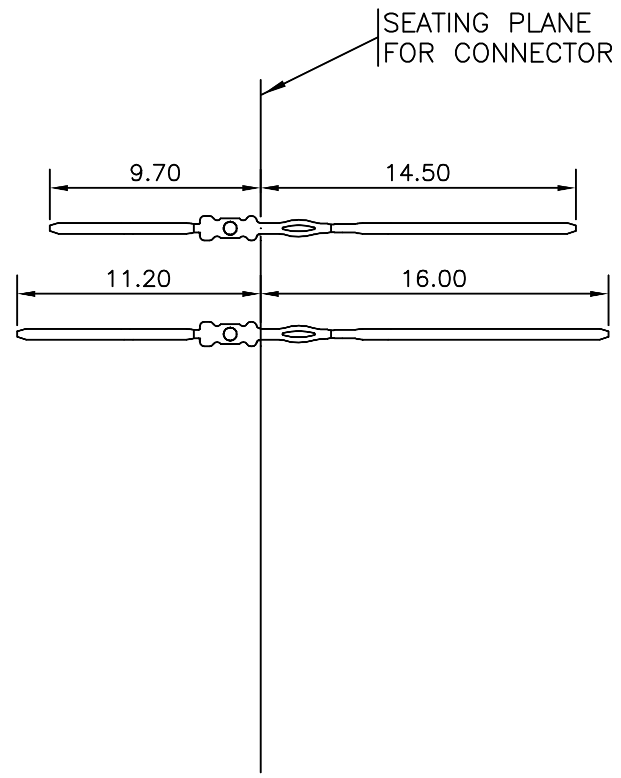

LAY—OUT P.C.B.—HOLE

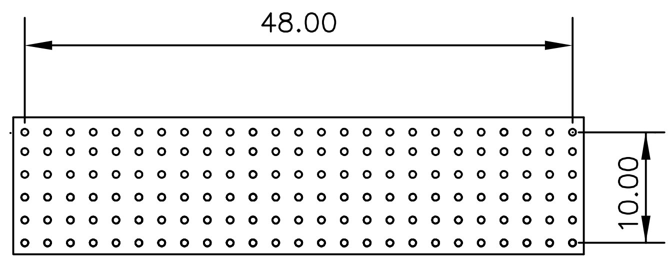

HM2PN2PMA1U5----

LEAD FREE INDICATOR : LF = LEAD FREE
(DIGIT 15 & 16)

PLATING CODE (DIGIT 13 AND 14)
(REF DRW NO. BS,C , 201844 , 003)

NOTES

1. THIS PRODUCT IS CSA APPROVED.
2. THIS PRODUCT IS UL RECOGNIZED.
3. MEASURED AT THE BOTTOM.
4. MATERIAL CONTACT: PHOSPHORBRONZE
   HOUSING: CREAM WHITE GLASS FILLED POLYESTER UL-94V0
5. CONNECTOR PRINTED WITH P/N AND DATE CODE.
6. FOR ACTUAL CONTACT LOADINGS, SEE LOADING PATTERN MATING SIDE.
7. SHAPE OF CONNECTOR HOUSING CAN ALTER DEPENDING ON PRODUCTION LOCATION
8. THIS PRODUCT (LF) MEETS EUROPEAN UNION DIRECTIVES AND OTHER COUNTRY REGULATIONS AS DESCRIBED IN GS-22-008
9. FOR RECOMMENDED PTH DIMENSIONS REFER DRAWING : BS, A , 201572 , 001

PART NO: HM2PN2PMA1U5----

mat'l. code: SEE NOTE 4	surface: ISO 1302 √	tolerance: ISO 406 ISO 1101	projection
tolerances unless otherwise specified			MM
angles: 0°±1°	linear: .0±0.2 / .00±0.1		scale —

ltr	ecn no	dr	date
A	I05-0139	MINI	2005/08/10
B	I06-0099	MINI	2006/07/07

dr	MINI K VANDANATH	2005/03/08
engr	BIJU K PAUL	2005/03/08
chr	BIJU K PAUL	2006/07/07
appd	BIJU K PAUL	2006/07/07

product family: MILLIPACS

title: MPACS 5+2R STR HDR PF CONN TYPE B (WIDTH = 15.4 MAX)

dwg no: BS, C ,203028,226 — sheet 1 of 1 — size A3

type: Product Customer Drawing

sheet index: revision B, sheet 1

form: A3

FCIconnect.com

Copyright FCI