Alle Rechte vorbehalten/ *All rights reserved*

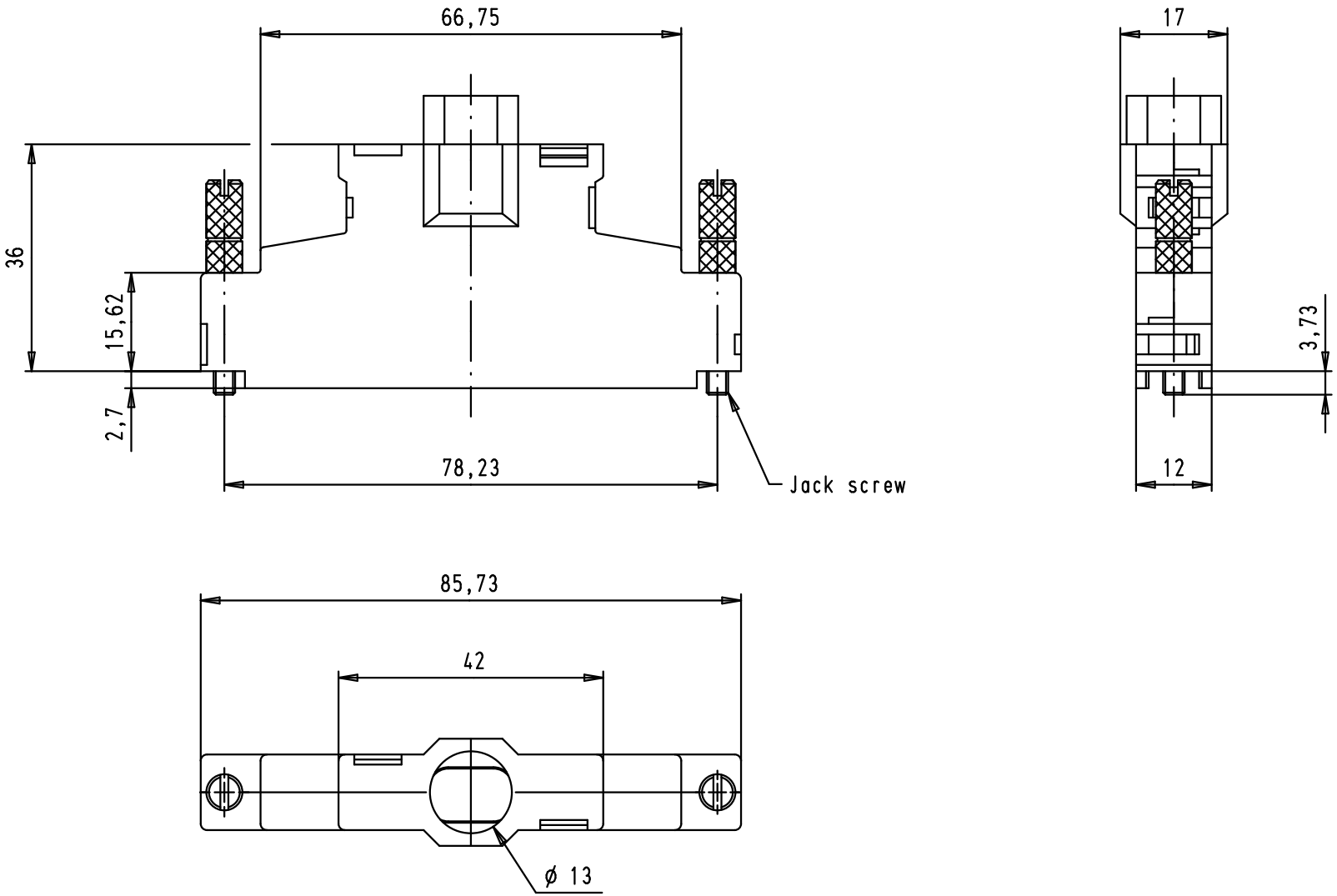

60 03 100 0146	4-40 UNC
60 03 100 0143	2-56 UNC
Part number	Jack screws thread

Mod.	Dat.	Name
EC00338	22/04/09	PK

	Dat.	Name
Detail.	22/04/09	PK
Insp.		
Stand.		

All Dim. in mm
Orig. Size DIN A 4

HARTING EURL
F-95972 Paris

Har-mik
Plastic hood with metal insert
for IDC pin/socket connector
with jack screws

Maßstab/ *Scale* 1:1

TB 60 03 100 014X

Sub. TB 60 03 100 0143 R35278

Blatt/ *Page* 1/1