THIS COPY IS PROVIDED ON A RESTRICTED BASIS AND IS NOT TO BE USED IN ANY WAY DETRIMENTAL TO THE INTERESTS OF PANDUIT CORP.

PANDUIT PART NUMBER	STUD SIZE	DIMENSIONS - in.					TOOLS
		L ± .03	W ± .01	C ± .02	M ± .03	H ± .01	
EV18-6LFB	#6	.90 (22.9)	.27 (6.9)	.22 (5.6)	.68 (17.3)	.14 (3.6)	*CT-100A CT-600A (CT-500CH) CT-600A (CT-550CH) CT-1550 CT-1551
EV18-8LFB	#8	.97 (24.6)	.29 (7.4)	.25 (6.4)	.73 (18.5)	.16 (4.1)	
EV18-10LFB	#10	.97 (24.6)	.33 (8.4)	.25 (6.4)	.73 (18.5)	.19 (4.8)	

*CT-100A, 167°F (75°C) MAX TEMP. RATING

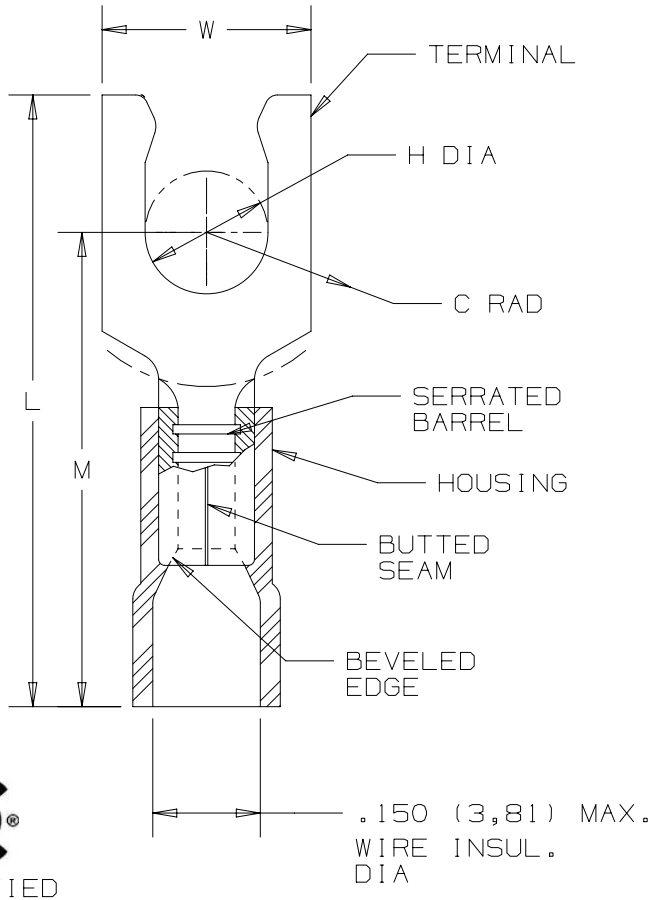

NOTES:

1. UL LISTED AND CSA CERTIFIED FOR:
   A. #22-18 AWG STRANDED COPPER WIRE
   B. 221°F (105°C) MAX TEMP RATING
   C. 600V MAX VOLTAGE RATING
      (1000V. MAX. IN SIGNS, FIXTURES & LUMINARIES)
2. MATERIAL:
   A. STAMPING - .032" (.81) THK, COPPER TIN PLATED
   B. HOUSING - VINYL, RED
3. WIRE STRIP LENGTH: 5/16" $^{+1/32}_{-0}$ (7,9mm $^{+0,8}_{-0}$)
4. SEE WWW.PANDUIT.COM FOR PACKAGE QUANTITIES
5. DIMENSIONS IN BRACKETS ARE IN MILLIMETERS

c UL us
LISTED
587H
E52164

CSA
CERTIFIED
LR31212

REV	DATE	BY	CHK	APR	DESCRIPTION	ECN
00	2/18	JHNU	TMR	RGB	RELEASED	00123SH

TITLE
STRONGHOLD LOCKING FORK TERMINALS
VINYL INSULATED, BUTTED SEAM #22-18 AWG
CUSTOMER DRAWING

ITEM REVISION NAME: 00123SHV/00
DATASET FILE NAME: 00123SHV/00

PANDUIT

UNLESS OTHERWISE SPECIFIED, DIMENSIONAL TOLERANCES ARE: IN [mm]
.X ± .XXX ±
.XX ± ANGLES ±
THIRD ANGLE PROJECTION

MATERIAL: SEE NOTES

DRAWING NUMBER: SH41288

DRAWN BY	DATE	CHK	SCALE	SHT 1 OF 1	SIZE
JHNU	2/18	TMR	NONE		A

D10100DA/16