THIS DRAWING IS UNPUBLISHED. RELEASED FOR PUBLICATION -,- .
© COPYRIGHT - By - ALL RIGHTS RESERVED.

LOC	DIST
CM	00

REVISIONS

P	LTR	DESCRIPTION	DATE	DWN	APVD
	M1	REVISED PER ECO-11-011461	22JUL11	HMR	SM

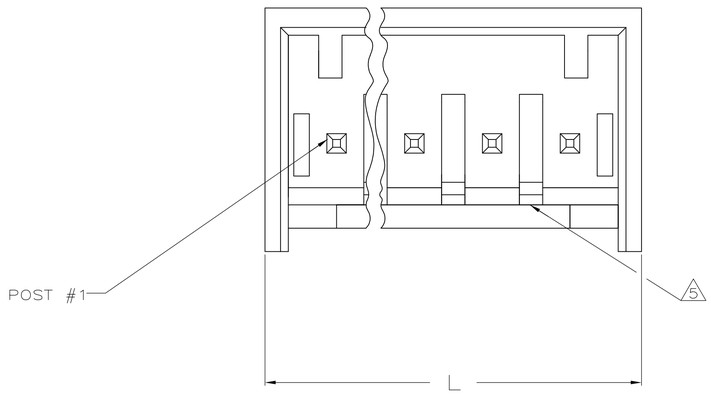

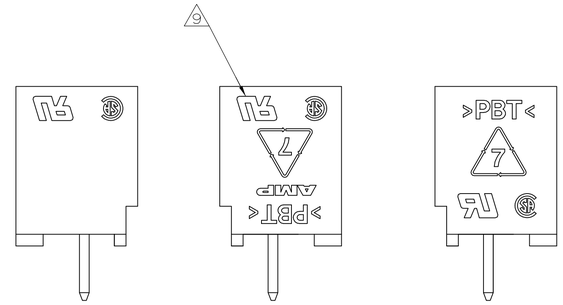

POSSIBLE MARKING CONFIGURATIONS
SCALE 5:1

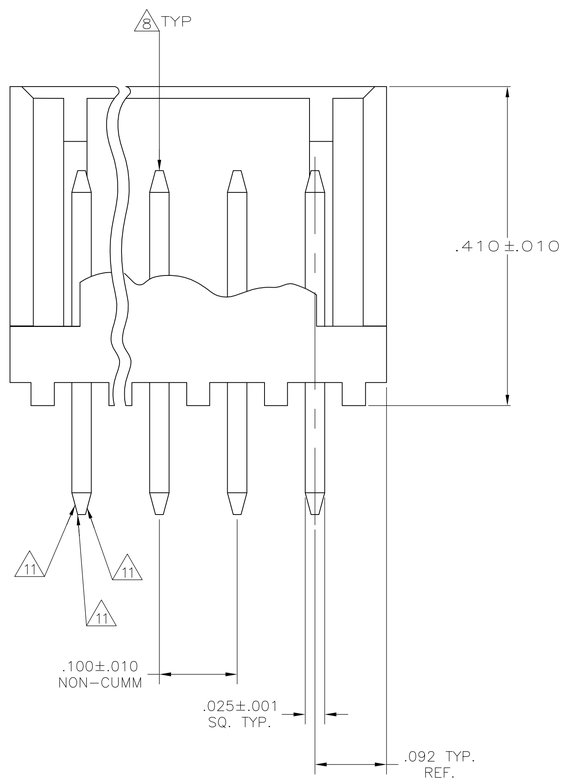

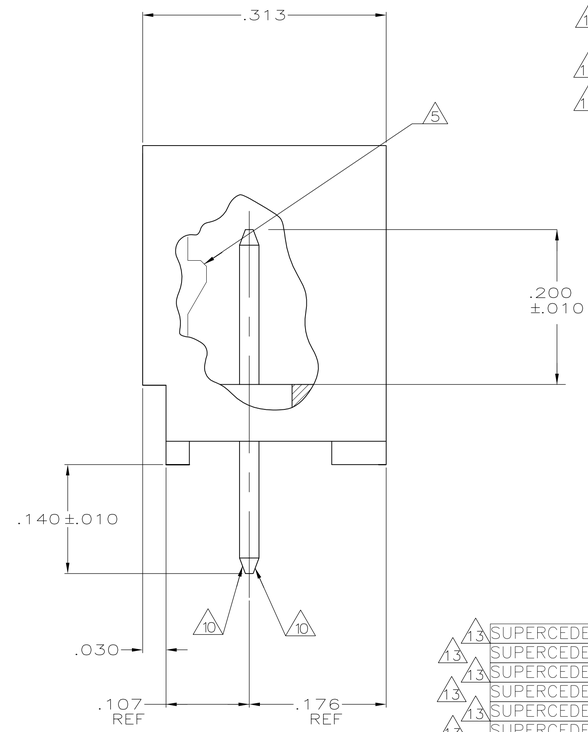

1. MATERIAL: HEADER- POLYESTER UL94V-0 (BLACK)
   POST- COPPER ALLOY.
2. SOLDER SIDE OF P.C. BOARD SHOWN.
3. PARTS COMPLY WITH AMP SOLDERABILITY SPEC 109-11-2.
4. ONE HOLE MAY BE UNDERSIZED (.032-.035 DIA) FOR ASSEMBLY RETENTION DURING WAVE SOLDERING.
5. LATCH DETENT FEATURE OCCURS 2 PLACES ON EACH END (MAXIMUM OF FOUR PER PART). FOR 2 THRU 5 CIRCUIT HEADERS, LATCH FEATURE OCCURS BETWEEN EACH CIRCUIT.
6. COORDINATE DIMENSION APPLIES FROM CENTER OF ACTUAL FEATURE.
7. POST: 100% BRIGHT TIN PLATED.
8. POST MUST WITHSTAND 3.0 LBS (13 NEWTONS) MIN FORCE WITHOUT DISLODGING, EITHER DIRECTION.
9. UL AND CSA LOGO WILL APPEAR IN THIS AREA. AMP LOGO MAY APPEAR IN THIS AREA OR ON BOTTOM OF PART.
10. TWO SIDES OF TAPER, AS SHOWN, MUST BE PLATED. TYPICAL, BOTH ENDS.
11. TWO SIDES OF TAPER, AS SHOWN, AND TIP MAY BE UNPLATED. TYPICAL, BOTH ENDS.
12. POST: MATTE TIN-LEAD (93/7) PLATED.
13. OBSOLETE PART NUMBER.

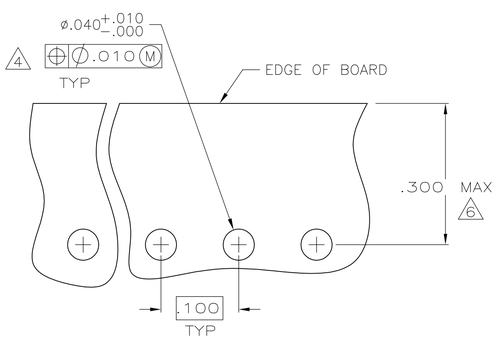

RECOMMENDED MOUNTING HOLE PATTERN
FOR .063 THK PRINTED CIRCUIT BOARD 2

							1.484	37.69	14	3-644861-4
							1.384	35.15	13	3-644861-3
							1.284	32.61	12	3-644861-2
							1.184	30.07	11	3-644861-1
							1.084	27.53	10	3-644861-0
							.984	24.99	9	2-644861-9
							.884	22.45	8	2-644861-8
							.784	19.91	7	2-644861-7
							.684	17.37	6	2-644861-6
							.584	14.83	5	2-644861-5
							.484	12.29	4	2-644861-4
							.384	9.75	3	2-644861-3
						YES	.284	7.21	2	2-644861-2
13	13	13	13	13	13		1.484	37.69	14	1-644861-4
13	13	13	13	13	13		1.384	35.15	13	1-644861-3
13	13	13	13	13	13		1.284	32.61	12	1-644861-2
13	13	13	13	13	13		1.184	30.07	11	~~1-644861-1~~
13	13	13	13	13	13		1.084	27.53	10	1-644861-0
13	13	13	13	13	13		.984	24.99	9	644861-9
13	13	13	13	13	13		.884	22.45	8	644861-8
13	13	13	13	13	13		.784	19.91	7	644861-7
13	13	13	13	13	13		.684	17.37	6	644861-6
13	13	13	13	13	13		.584	14.83	5	644861-5
13	13	13	13	13	13		.484	12.29	4	644861-4
13	13	13	13	13	13		.384	9.75	3	644861-3
13	13	13	13	13	13	NO	.284	7.21	2	644861-2
SUPERCEDED BY 3-644861-4	SUPERCEDED BY 3-644861-3	SUPERCEDED BY 3-644861-2	SUPERCEDED BY 3-644861-1	SUPERCEDED BY 3-644861-0	SUPERCEDED BY 2-644861-9	SUPERCEDED BY 2-644861-8	SUPERCEDED BY 2-644861-7	SUPERCEDED BY 2-644861-6	SUPERCEDED BY 2-644861-5	SUPERCEDED BY 2-644861-4	SUPERCEDED BY 2-644861-3	SUPERCEDED BY 2-644861-2	LEADFREE	FINISH	IN	MM	NO OF POSITIONS	PART NUMBER
									L		HEADER ASSEMBLY

.035	0.89	.176	4.47	—	—
.032	0.81	.140	3.56	—	—
.030	0.76	.107	2.72	—	—
.025	0.64	.100	2.54	—	—
.010	0.25	.092	2.34	.410	10.41
.005	0.13	.063	1.6	.313	7.95
.001	0.03	.050	1.27	.300	7.62
.000	0	.040	1.02	.200	5.08
IN	MM	IN	MM	IN	MM

CONVERSION TABLE

METRIC

THIS DRAWING IS A CONTROLLED DOCUMENT.

DIMENSIONS: INCHES

TOLERANCES UNLESS OTHERWISE SPECIFIED:
0 PLC ± –
1 PLC ± –
2 PLC ± –
3 PLC ± .005
4 PLC ± –
ANGLES ± –

MATERIAL 1

FINISH SEE TABLE

DWN S. CARPENTER 28MAY2003
CHK D. BOSSI 28MAY2003
APVD D. BOSSI 28MAY2003
PRODUCT SPEC
APPLICATION SPEC
WEIGHT

TE Connectivity

NAME MTA-100 SHROUDED HEADER ASSEMBLY, FRICTION LOCK,STRAIGHT POST, TIN OR TIN LEAD PLATED

SIZE	CAGE CODE	DRAWING NO	RESTRICTED TO
A1	00779	C-644861	—

CUSTOMER DRAWING SCALE 10:1 SHEET 1 OF 1 REV M1

4805 (3/11)